TECHNO MODULE LIGHT

MODULAR
ELSTEEL
ENCLOSURES

www.elsteel.com

The best technical solution at the best possible price

This lightweight version of Techno Module covers all requirements up to 1600A 50 kA / 1 s.

With less material but maintaining the same strength and quality, the end-user gets an extremely versatile product which can be easily modified and expanded, during and after installation.

Distribution boxes can be either fully welded Box (as shown here), or a modular construction; Techno Module Light (opposite).

Either way the same inserts will fit, making it effortless to mix and match exactly according to your project.

That's the beauty of modular!

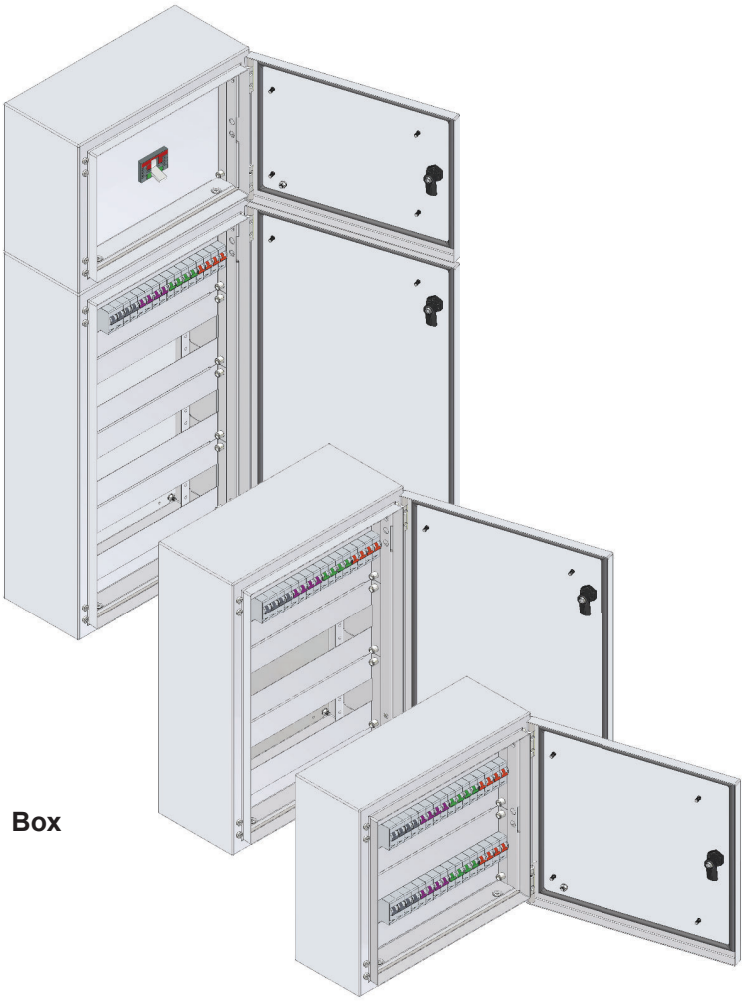

Box

You´re holding a top of the line quality product in your hands.
Made with love and excellence!
I hope you will enjoy assembling and using Elsteel products as much as I enjoy manufacturing it for you.

Fang Logstrup
Managing Director

Distribution boards are a fast product; they must be easy to assemble, fast to wire and preferably delivered yesterday!
We have designed Techno Module Light to be easy to assemble and prepared for "fast wiring"!
As much as possible is factory assembled while still allowing you the freedom to build any size panel you need.

Wall mounted

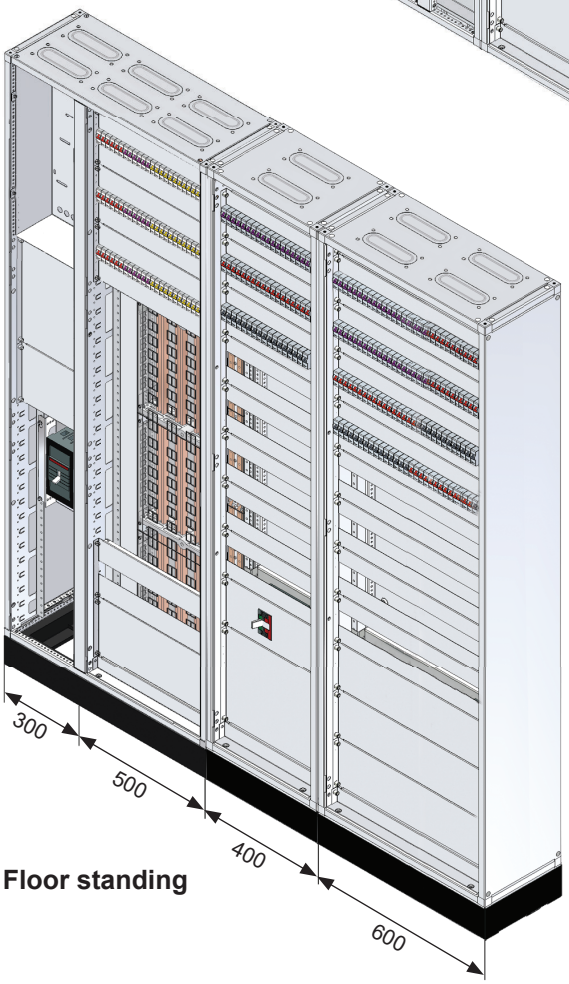

Floor standing

Floor standing or wall mounting is available - along with many more features, that reduce assembly time considerably.

Included for 800 and above

× 4 Nos.

PLINTH FRAME LIGHT

SOKKEL LIGHT

TYPE	DESCRIPTION	SIZE (W×D)	WEIGHT (kg)	ORDER No. RAL 9005 FTF.
PFL 4.2	PLINTH FRAME LIGHT	400 × 200	3.40	17995
PFL 6.2	PLINTH FRAME LIGHT	600 × 200	6.00	18001
PFL 8.2	PLINTH FRAME LIGHT	800 × 200	9.20	18003
PFL 10.2	PLINTH FRAME LIGHT	1000 × 200	10.70	18005
PFL 12.2	PLINTH FRAME LIGHT	1200 × 200	12.50	18007
PFL 14.2	PLINTH FRAME LIGHT	1400 × 200	13.70	18009
PFL 16.2	PLINTH FRAME LIGHT	1600 × 200	15.30	18011
PFL 4.3	PLINTH FRAME LIGHT	400 × 300	3.49	17997
PFL 6.3	PLINTH FRAME LIGHT	600 × 300	6.80	18015
PFL 8.3	PLINTH FRAME LIGHT	800 × 300	10.11	18017
PFL 10.3	PLINTH FRAME LIGHT	1000 × 300	11.63	18019
PFL 12.3	PLINTH FRAME LIGHT	1200 × 300	13.40	18021
PFL 14.3	PLINTH FRAME LIGHT	1400 × 300	14.65	18023
PFL 16.3	PLINTH FRAME LIGHT	1600 × 300	16.16	18025

Included for 800 and above

PLINTH FRAME LIGHT WITH CORNER ASSEMBLY

SOKKEL LIGHT MED HJØRNER OG SKINNER

TYPE	DESCRIPTION	SIZE (W×D)	WEIGHT (kg)	ORDER No. RAL 7035 FTF.
PFLC 4.2	PLINTH FRAME LIGHT WITH CORNER ASSEMBLY	400 × 200	3.87	64895
PFLC 6.2	PLINTH FRAME LIGHT WITH CORNER ASSEMBLY	600 × 200	7.20	64905
PFLC 8.2	PLINTH FRAME LIGHT WITH CORNER ASSEMBLY	800 × 200	10.53	64925
PFLC 10.2	PLINTH FRAME LIGHT WITH CORNER ASSEMBLY	1000 × 200	12.30	64945
PFLC 12.2	PLINTH FRAME LIGHT WITH CORNER ASSEMBLY	1200 × 200	14.36	64965
PFLC 14.2	PLINTH FRAME LIGHT WITH CORNER ASSEMBLY	1400 × 200	15.83	64855
PFLC 16.2	PLINTH FRAME LIGHT WITH CORNER ASSEMBLY	1600 × 200	17.69	64875
PFLC 4.3	PLINTH FRAME LIGHT WITH CORNER ASSEMBLY	400 × 300	4.67	64985
PFLC 6.3	PLINTH FRAME LIGHT WITH CORNER ASSEMBLY	600 × 300	8.13	64915
PFLC 8.3	PLINTH FRAME LIGHT WITH CORNER ASSEMBLY	800 × 300	11.57	64935
PFLC 10.3	PLINTH FRAME LIGHT WITH CORNER ASSEMBLY	1000 × 300	13.36	64955
PFLC 12.3	PLINTH FRAME LIGHT WITH CORNER ASSEMBLY	1200 × 300	15.40	64975
PFLC 14.3	PLINTH FRAME LIGHT WITH CORNER ASSEMBLY	1400 × 300	16.91	64865
PFLC 16.3	PLINTH FRAME LIGHT WITH CORNER ASSEMBLY	1600 × 300	18.69	64885

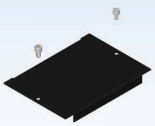

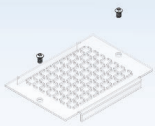

GLANDS (FOR PLINTH FRAME LIGHT)

FLANGER (TIL SOKKEL LIGHT)

TYPE	DESCRIPTION	SIZE (W×D)	WEIGHT (kg)	ORDER No.
SGPFL 2	STEEL GLAND PLATE	200 × 100	0.19	18761
PGPFL 2	PC GLAND PLATE	200 × 100	0.03	18762
SGPFL 3	STEEL GLAND PLATE	300 × 100	0.28	18766
PGPFL 3	PC GLAND PLATE	300 × 100	0.04	18767

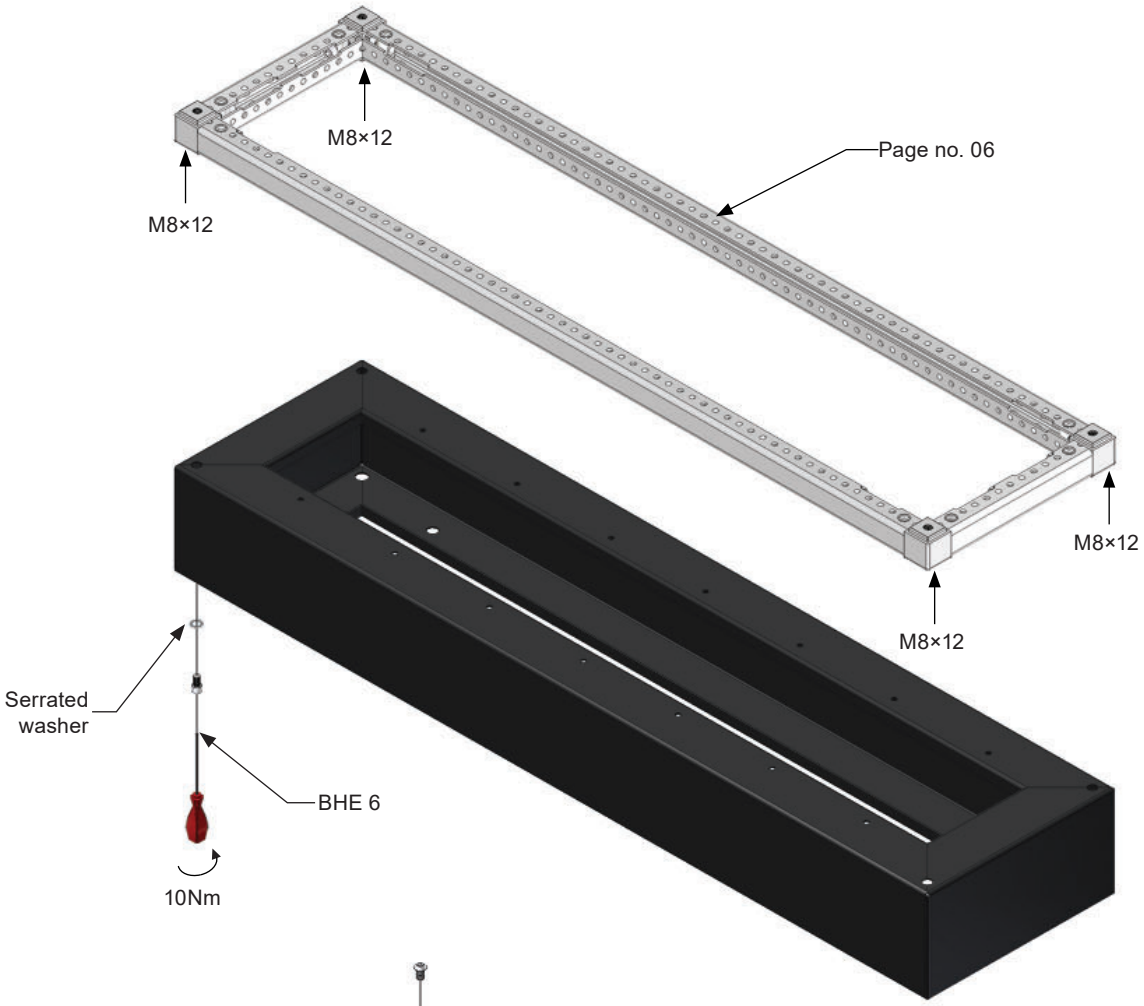
M8×12
M8×12
Page no. 06
M8×12
M8×12
Serrated
washer
BHE 6
10Nm

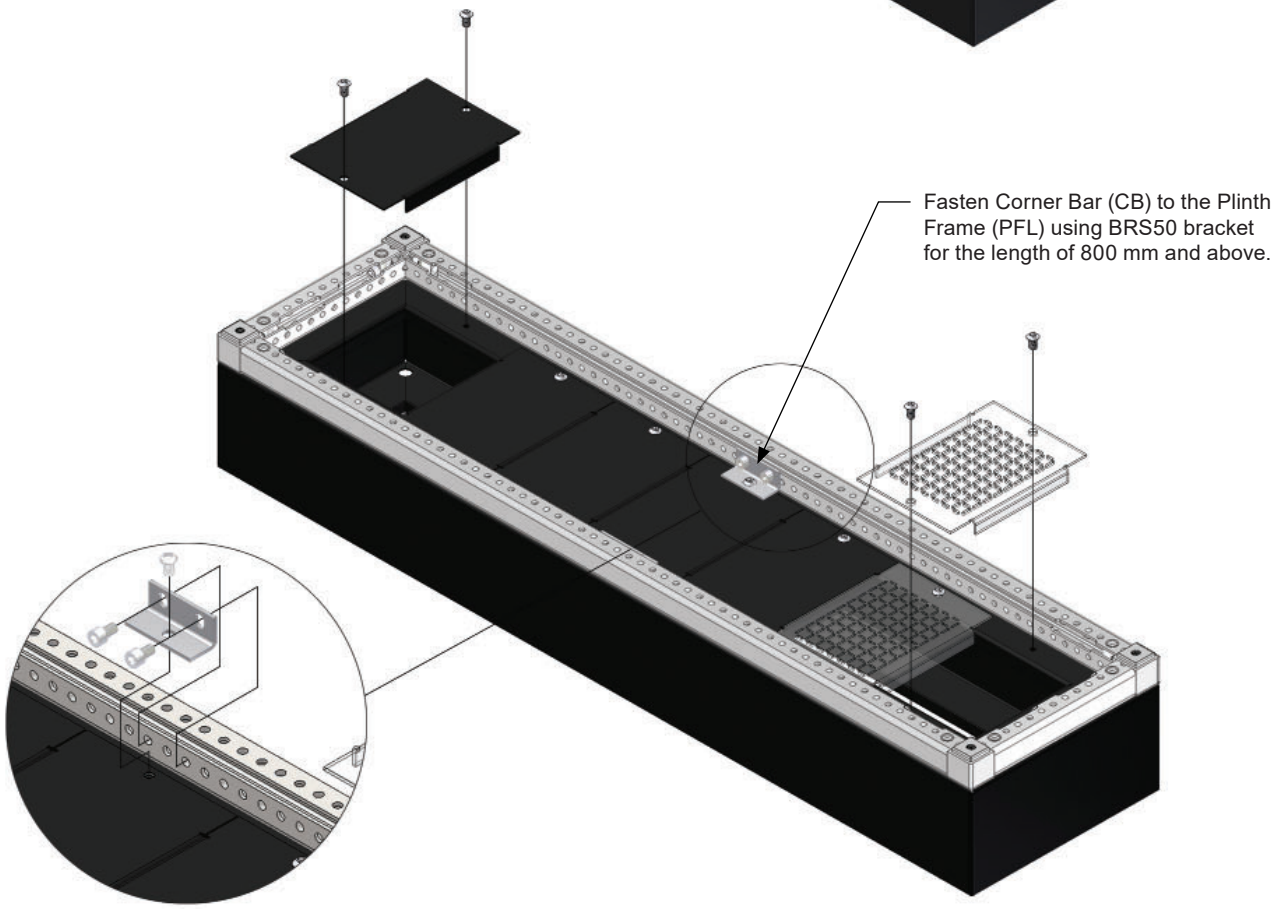
Fasten Corner Bar (CB) to the Plinth
Frame (PFL) using BRS50 bracket
for the length of 800 mm and above.

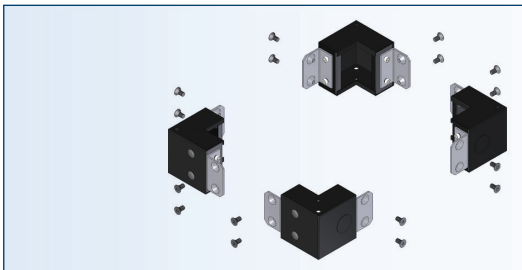

PLINTH CORNERS ■

SOKKEL HJØRNE ■

TYPE	DESCRIPTION	SIZE	WEIGHT (kg)	ORDER NO. RAL 9005 FTF.
BFC	PLINTH CORNERS	100×100	4.50	10011

PLINTH PROFILES ■

SOKKEL PROFIL ■

TYPE	DESCRIPTION	PROFILE LENGTH	PANEL SIZE	WEIGHT (kg)	ORDER NO. RAL 9005 FTF.
BPP 3	PLINTH PROFILES	100	300	0.63	10034
BPP 4	PLINTH PROFILES	200	400	1.31	10044
BPP 6	PLINTH PROFILES	400	600	2.56	10054
BPP 8	PLINTH PROFILES	600	800	3.83	10063
BPP 10	PLINTH PROFILES	800	1000	5.26	10069
BPP 12	PLINTH PROFILES	1000	1200	6.54	10079
BPP 14	PLINTH PROFILES	1200	1400	7.83	10089
BPP 16	PLINTH PROFILES	1400	1600	9.39	10099
BPP 18	PLINTH PROFILES	1600	1800	10.46	10109
BPP 20	PLINTH PROFILES	1800	2000	11.74	10119
BPP 22	PLINTH PROFILES	2000	2200	13.39	10035
BPP 24	PLINTH PROFILES	2200	2400	14.19	10036

BRS 50 brackets included in 800 and above profile length.

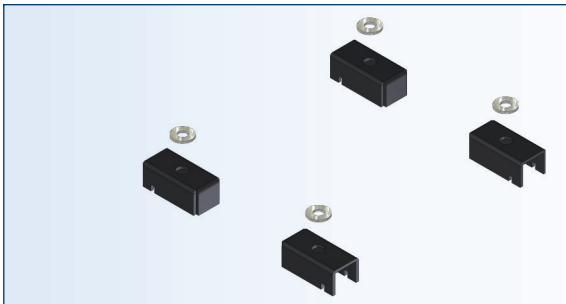

CLAMPING BRACKETS (INTERNAL FIXING) ■

GULV BESLAG (UDVENDIG) ■

TYPE	DESCRIPTION	WEIGHT (kg)	ORDER NO. RAL 9005 FTF.
BCB	CLAMPING BRACKETS	0.46	10171

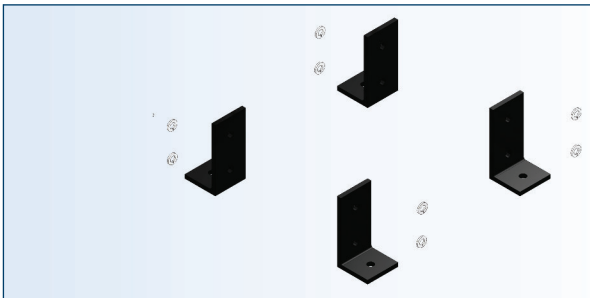

CLAMPING ANGLES (EXTERNAL FIXING) ■

GULV BESLAG (VINKEL) ■

TYPE	DESCRIPTION	WEIGHT (kg)	ORDER NO. RAL 9005 FTF.
PCA	CLAMPING ANGLES	1.35	10172

Plinth Corners

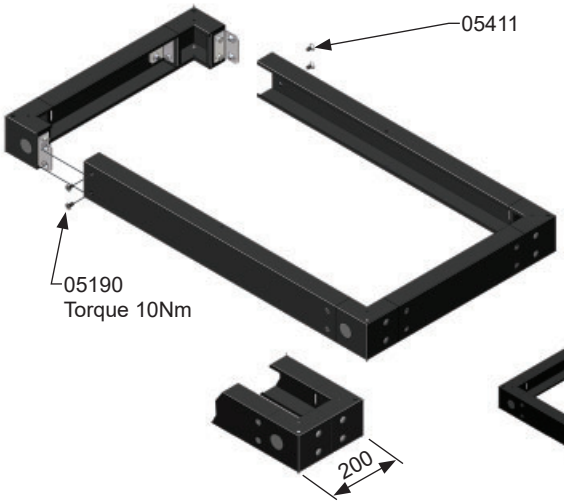

Torque 10 Nm

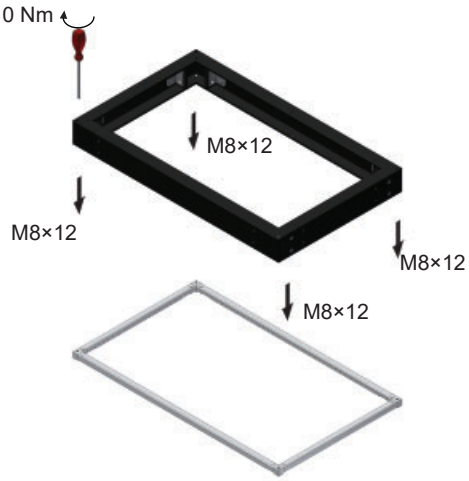

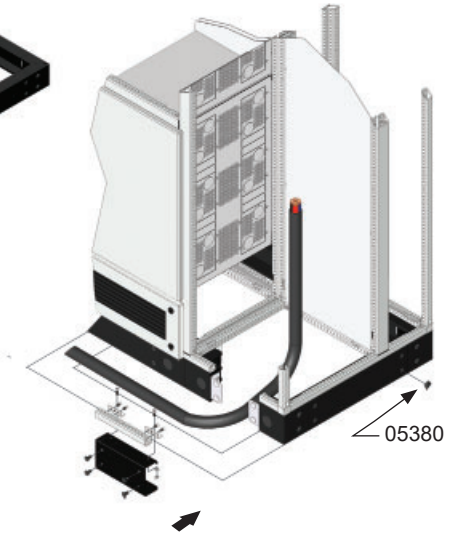

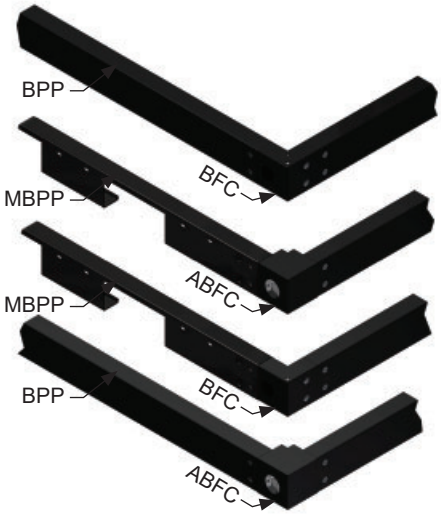

Lifting Instructions for Forklift
Maximum weight = 2300kg
Maximum panel width = 2200mm

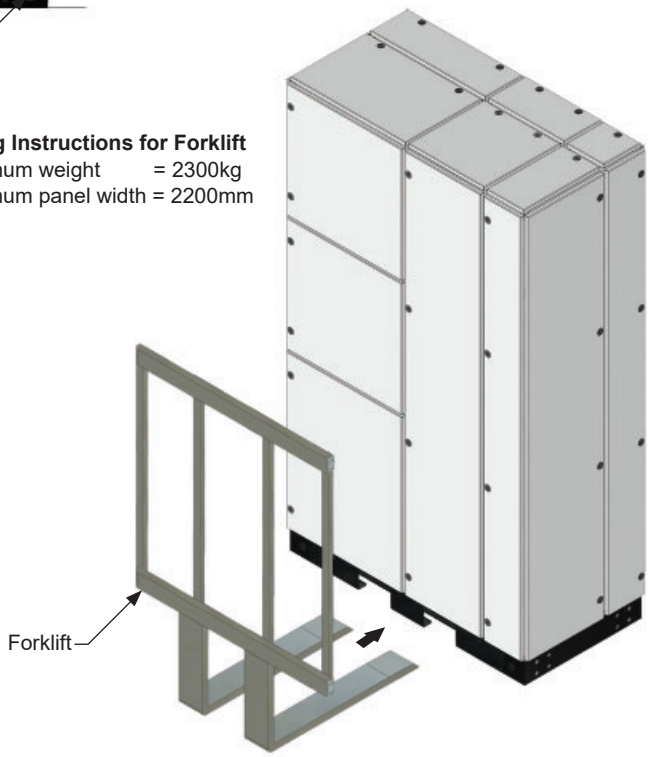

Note (for **BFC** only):
* The floor or the base must be levelled horizontally with the maximum deviation of ±1 mm per 1 meter, but no more than ±3 mm for the length of Panel.

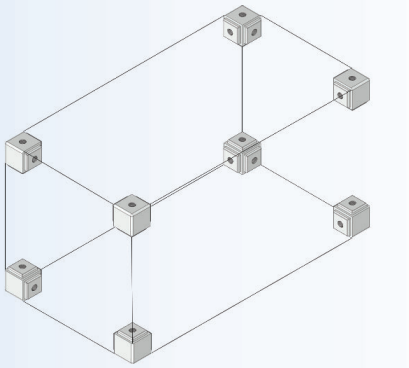

CORNERS LIGHT

HJØRNE LIGHT

TYPE	DESCRIPTION	WEIGHT (kg)	ORDER No. RAL 7035 FTF.
CRL	CORNERS LIGHT	0.41	18134

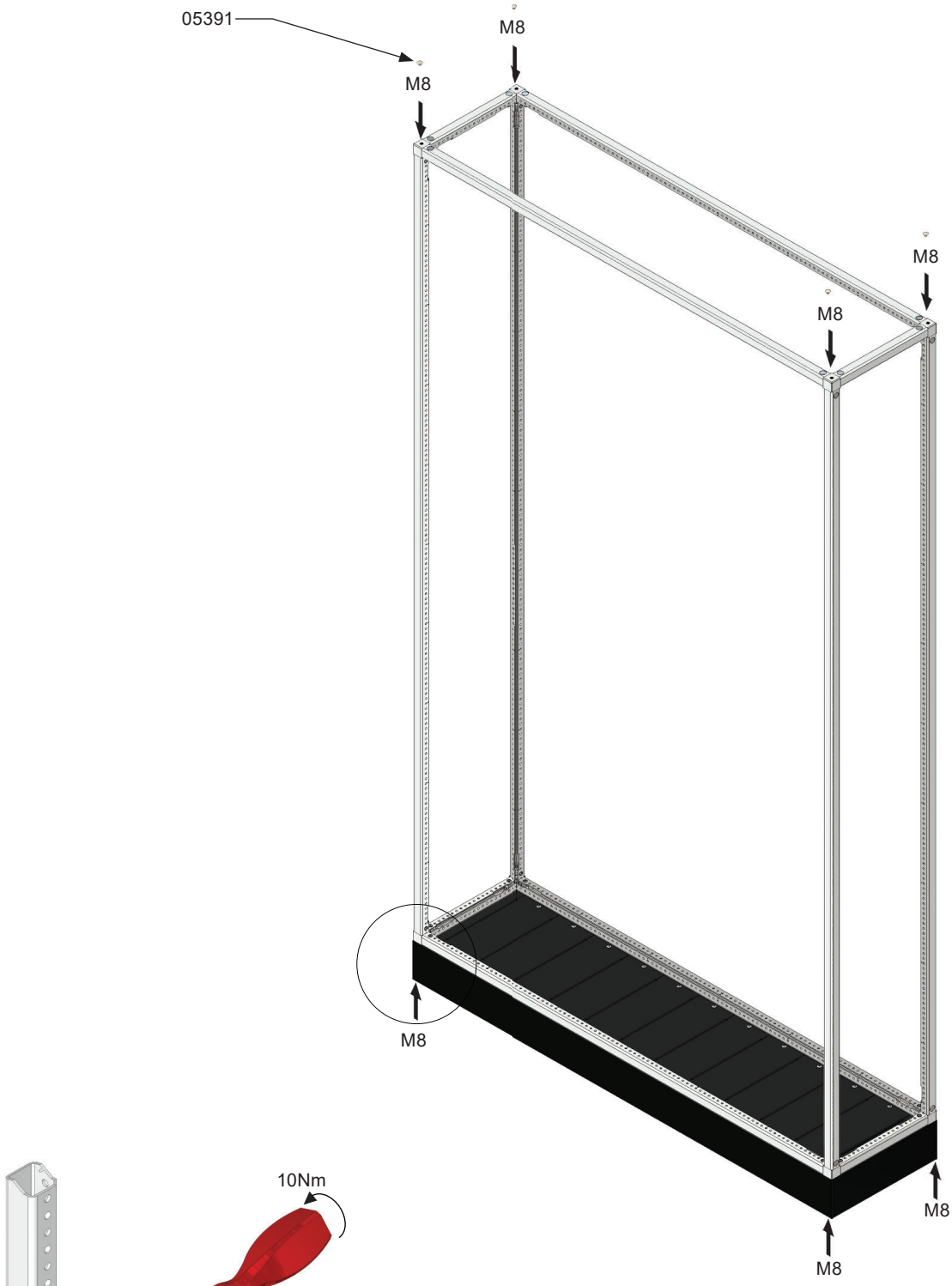
05391
M8
M8
M8
M8
M8
M8
M8

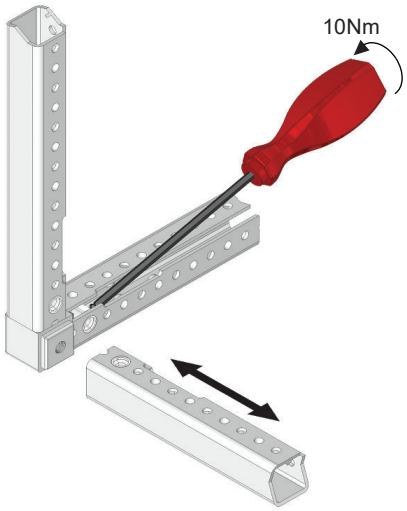
10Nm

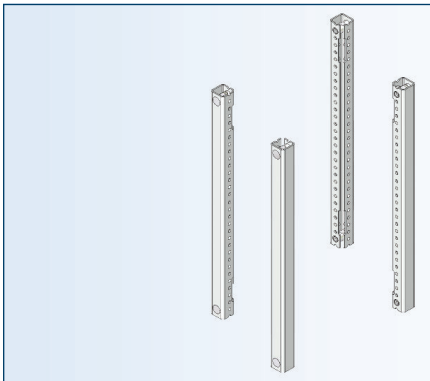

CORNER BARS LIGHT

HJØRNE SKINNER LIGHT

TYPE	DESCRIPTION	PANEL SIZE	WEIGHT (kg)	ORDER No. RAL 7035 FTF.
CBL 2	CORNER BARS LIGHT	200	0.66	18154
CBL 3	CORNER BARS LIGHT	300	0.91	18164
CBL 4	CORNER BARS LIGHT	400	1.42	18174
CBL 6	CORNER BARS LIGHT	600	1.68	18184
CBL 8	CORNER BARS LIGHT	800	2.22	18194
CBL 10	CORNER BARS LIGHT	1000	2.71	18204
CBL 12	CORNER BARS LIGHT	1200	3.21	18214
CBL 14	CORNER BARS LIGHT	1400	3.75	18224
CBL 16	CORNER BARS LIGHT	1600	4.23	18234
CBL 18	CORNER BARS LIGHT	1800	4.77	18244
CBL 20	CORNER BARS LIGHT	2000	5.21	18254

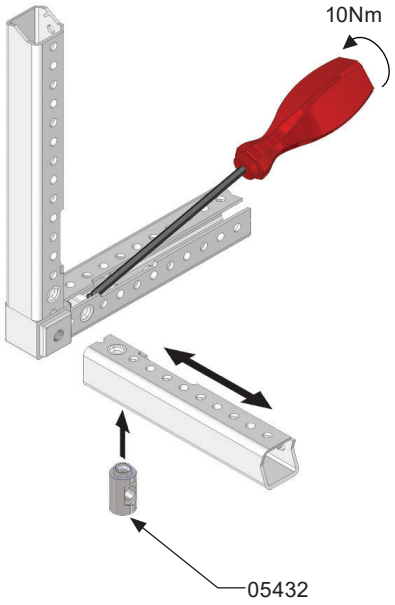

1

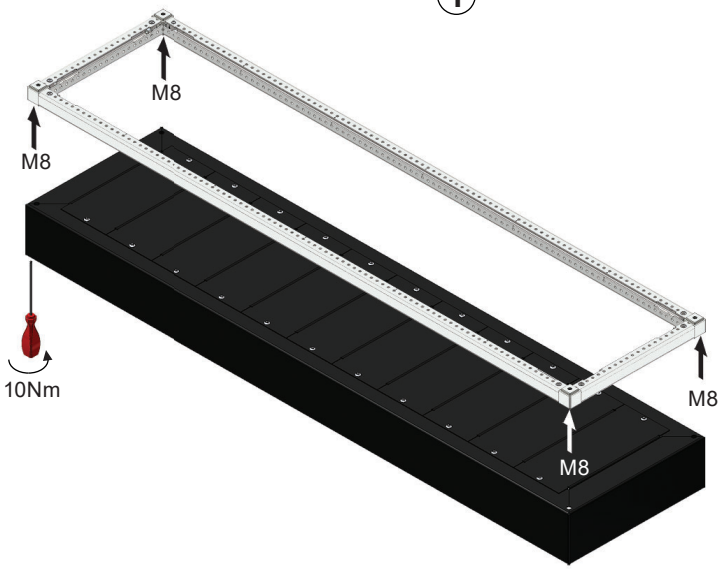

2

3

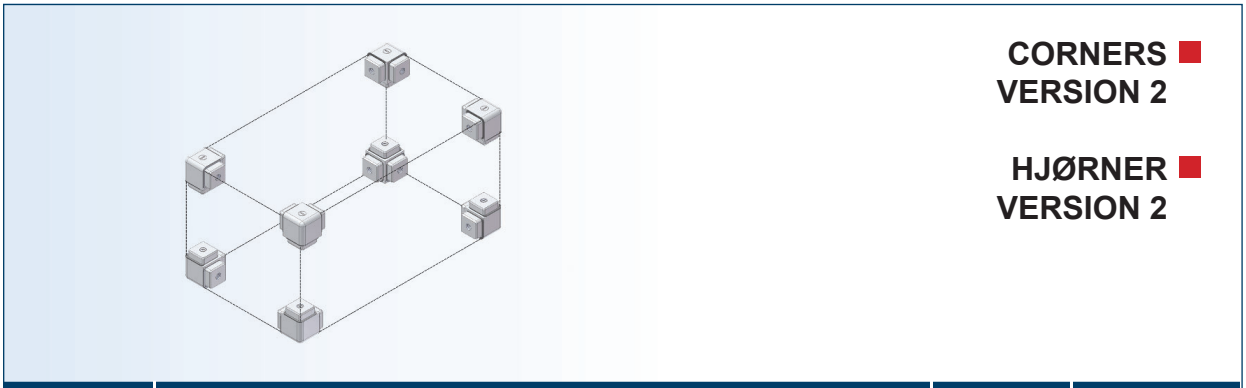

CORNERS VERSION 2

HJØRNER VERSION 2

TYPE	DESCRIPTION	WEIGHT (kg)	VERSION 2 ORDER NO. RAL 7035 FTF.
CRS	CORNERS	0.38	16584

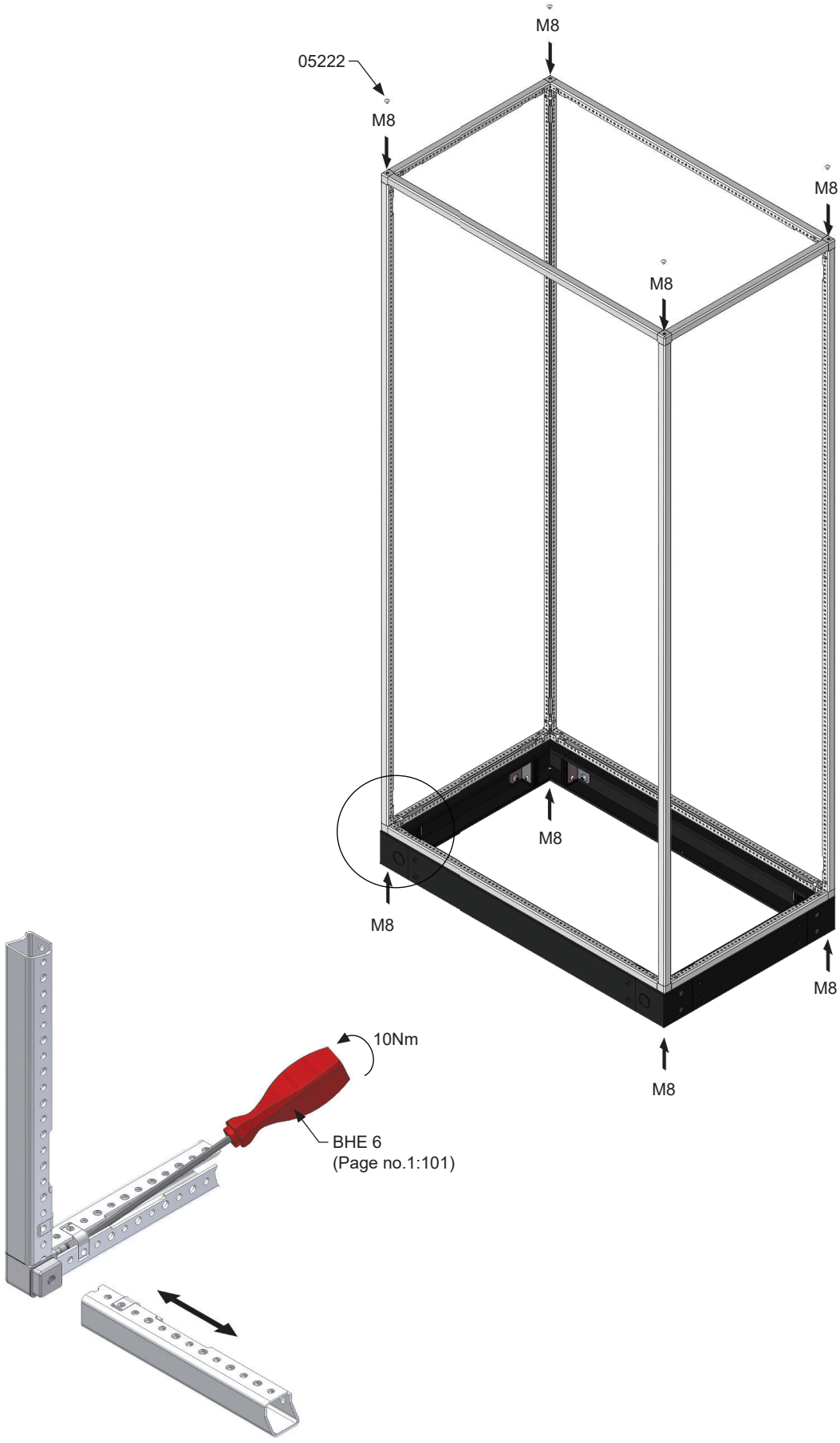

Version 2 Corners must be assembled with Version 2 Corner Bars.

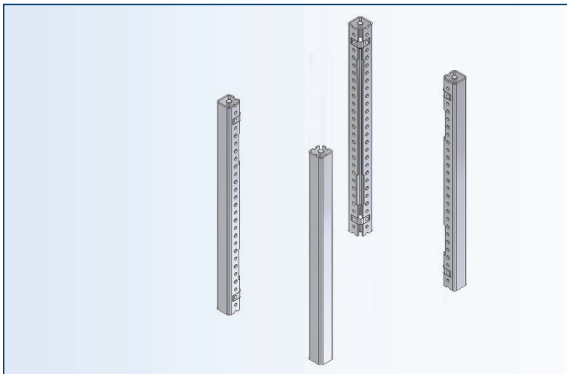

CORNER BARS
VERSION 2

HJØRNE SKINNER
VERSION 2

TYPE	DESCRIPTION	PANEL SIZE	WEIGHT (kg)	VERSION 2 ORDER NO. RAL 7035 FTF.
CB 2	CORNER BARS	200	0.94	16614
CB 3	CORNER BARS	300	1.42	16624
CB 4	CORNER BARS	400	1.88	16634
CB 6	CORNER BARS	600	2.78	16644
CB 8	CORNER BARS	800	3.08	16654
CB 10	CORNER BARS	1000	4.64	16664
CB 12	CORNER BARS	1200	5.56	16674
CB 14	CORNER BARS	1400	6.05	16684
CB 16	CORNER BARS	1600	7.38	16694
CB 18	CORNER BARS	1800	8.46	16704
CB 20	CORNER BARS	2000	9.54	16714
CB 22	CORNER BARS	2200	10.40	16724
CB 24	CORNER BARS	2400	11.28	16734

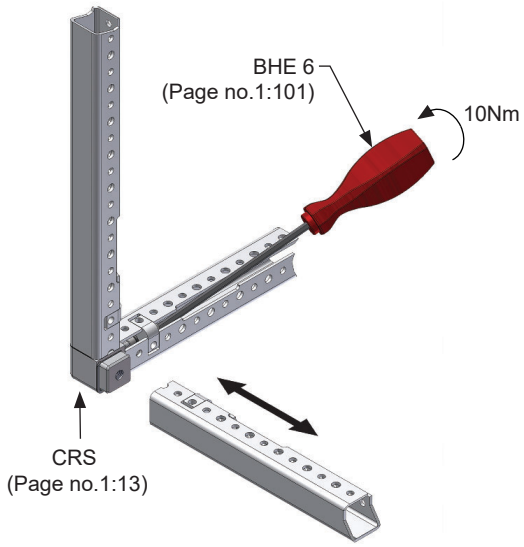

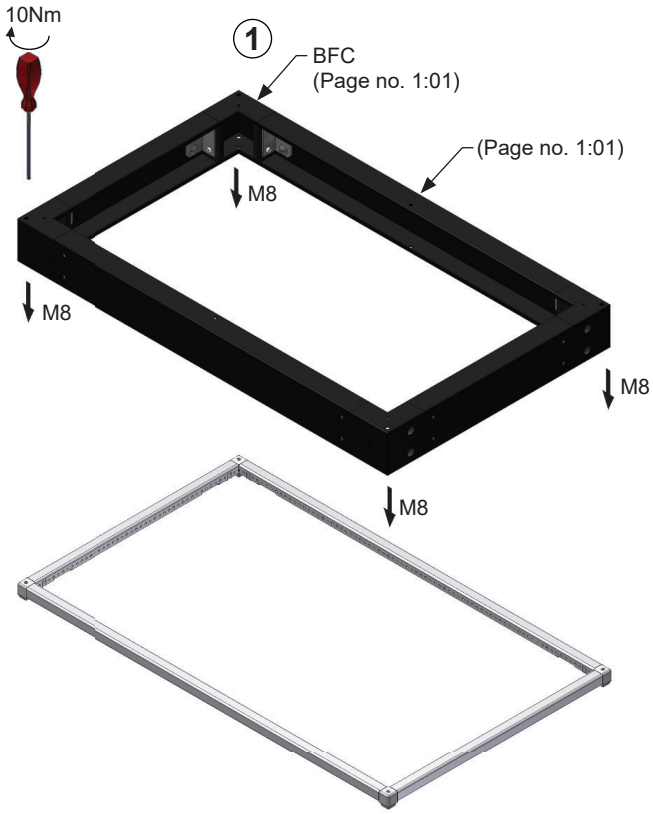

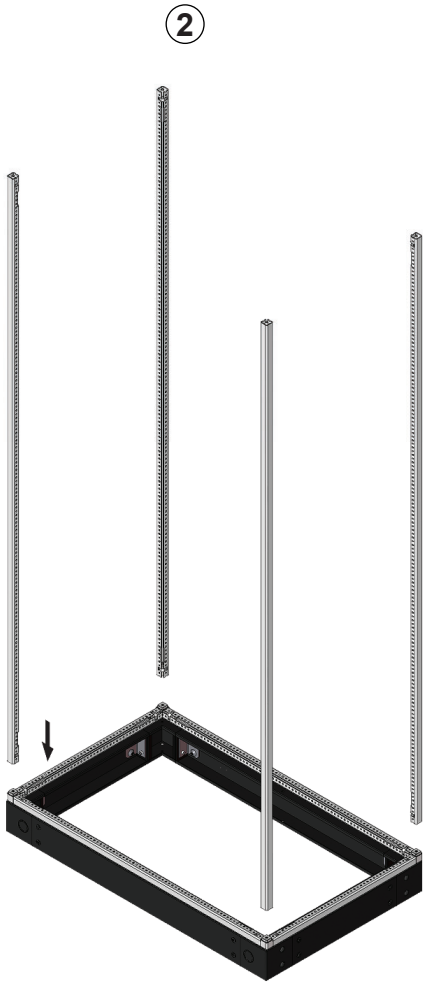

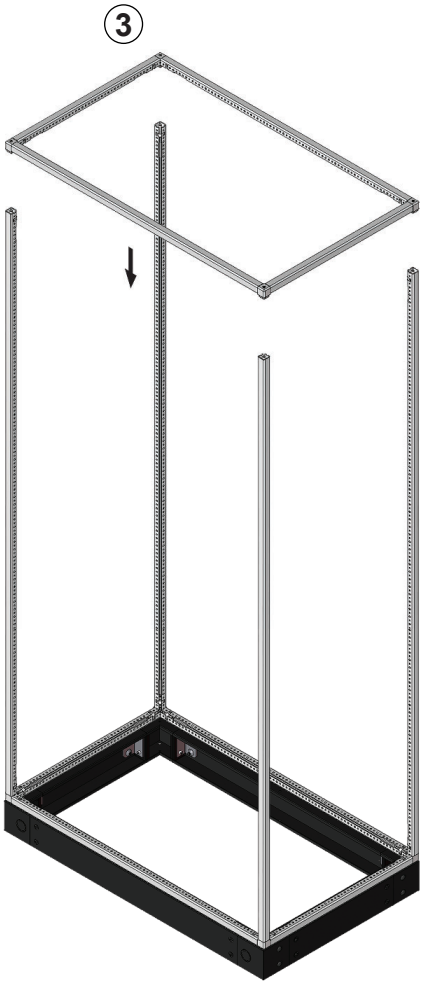

Version 2 Corners must be assembled with Version 2 Corner Bars.

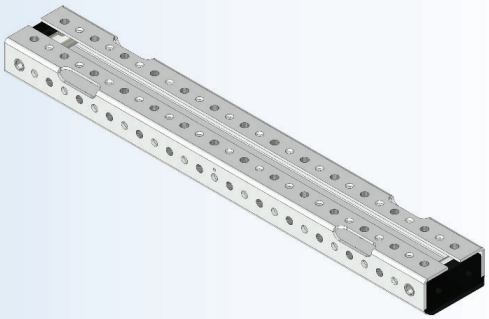

CROSS BAR LIGHT

SPROSSE LIGHT

TYPE	DESCRIPTION	PANEL SIZE	WEIGHT (kg)	ORDER No. RAL 7035 FTF.
CBSL 2	CROSS BAR LIGHT	200	0.16	18284
CBSL 3	CROSS BAR LIGHT	300	0.24	18394
CBSL 4	CROSS BAR LIGHT	400	0.37	18294
CBSL 5	CROSS BAR LIGHT	500	0.45	18274
CBSL 6	CROSS BAR LIGHT	600	0.58	18304
CBSL 8	CROSS BAR LIGHT	800	0.79	18314
CBSL 10	CROSS BAR LIGHT	1000	1.00	18324
CBSL 12	CROSS BAR LIGHT	1200	1.22	18334
CBSL 14	CROSS BAR LIGHT	1400	1.43	18344
CBSL 16	CROSS BAR LIGHT	1600	1.64	18354
CBSL 18	CROSS BAR LIGHT	1800	1.85	18364
CBSL 20	CROSS BAR LIGHT	2000	2.06	18374

CROSS BAR MOUNTING RAILS

SPROSSE MONTAGE BESLAG

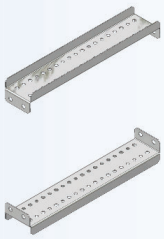

x8 Nos.

TYPE	DESCRIPTION	PANEL SIZE	WEIGHT (kg)	ORDER No.
CBMR 2	CROSS BAR MOUNTING RAILS	200	0.46	80440
CBMR 3	CROSS BAR MOUNTING RAILS	300	0.70	80442

Remove collar for internal cross bars only

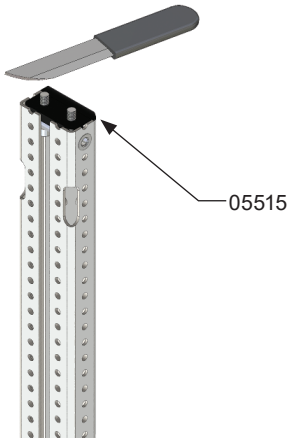

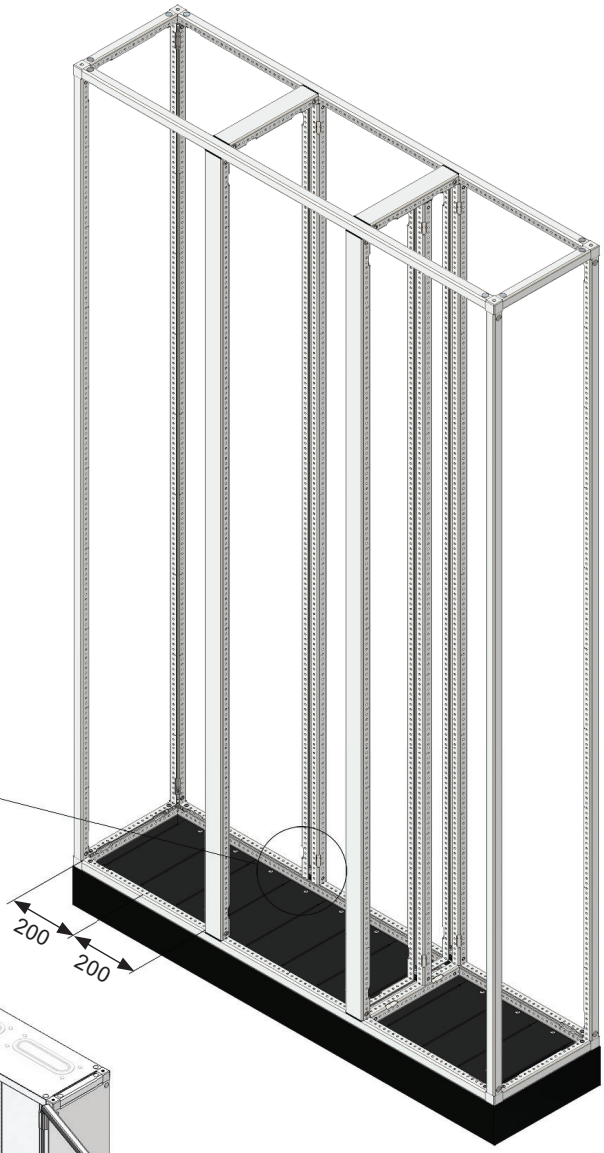

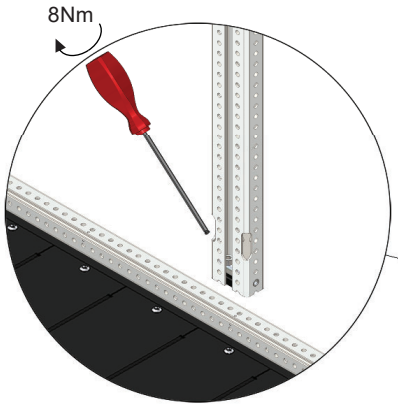

8 Nm torque must be applied to all accessories mounted on the panel structure

Tip!

Crossbar mounting rails should be used when internal parts need to be installed in this location. They also provide additional stability to the panel frame.

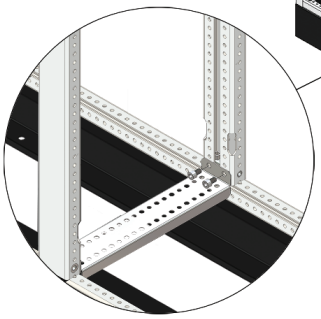

INSTANT PLATE LIGHT ■

INSTANT PLADE LIGHT ■

TYPE	DESCRIPTION	PANEL SIZE (W×H)	WEIGHT (kg)	ORDER No. RAL 7035 FTF.
INTL 2.2	INSTANT PLATE LIGHT	200 × 200	0.47	80454
INTL 2.4	INSTANT PLATE LIGHT	200 × 400	0.99	80464
INTL 2.6	INSTANT PLATE LIGHT	200 × 600	1.50	80474
INTL 2.8	INSTANT PLATE LIGHT	200 × 800	2.01	80484
INTL 2.10	INSTANT PLATE LIGHT	200 ×1000	2.53	80494
INTL 2.12	INSTANT PLATE LIGHT	200 ×1200	3.04	80504
INTL 2.14	INSTANT PLATE LIGHT	200 ×1400	3.55	80514
INTL 2.16	INSTANT PLATE LIGHT	200 ×1600	4.07	80524
INTL 2.18	INSTANT PLATE LIGHT	200 ×1800	4.58	80534
INTL 2.20	INSTANT PLATE LIGHT	200 ×2000	5.09	80544
INTL 3.2	INSTANT PLATE LIGHT	300 × 200	0.63	80574
INTL 3.4	INSTANT PLATE LIGHT	300 × 400	1.31	80584
INTL 3.6	INSTANT PLATE LIGHT	300 × 600	1.99	80594
INTL 3.8	INSTANT PLATE LIGHT	300 × 800	2.68	80604
INTL 3.10	INSTANT PLATE LIGHT	300 ×1000	3.36	80614
INTL 3.12	INSTANT PLATE LIGHT	300 ×1200	4.05	80624
INTL 3.14	INSTANT PLATE LIGHT	300 ×1400	4.73	80634
INTL 3.16	INSTANT PLATE LIGHT	300 ×1600	5.41	80644
INTL 3.18	INSTANT PLATE LIGHT	300 ×1800	6.09	80654
INTL 3.20	INSTANT PLATE LIGHT	300 ×2000	6.77	80664

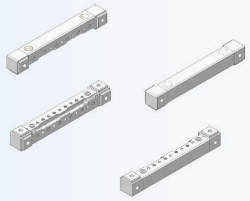

CORNER ASSEMBLY KIT LIGHT ■

HJØRNE SÆT ■

TYPE	DESCRIPTION	PANEL SIZE	WEIGHT (kg)	ORDER No. RAL 7035 FTF.
CAKL 2	CORNER ASSEMBLY KIT LIGHT	200	2.0	80804
CAKL 3	CORNER ASSEMBLY KIT LIGHT	300	3.0	80814

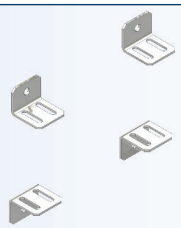

WALL MOUNTING BRACKETS ■ (FOR INSTANT PANEL)

VÆG BESLAG ■ (TIL INSTANT PLADE)

TYPE	DESCRIPTION	WEIGHT (kg)	ORDER No. RAL 7035 FTF.
INWB	WALL MOUNTING BRACKETS	0.30	80400

Installation dimensions

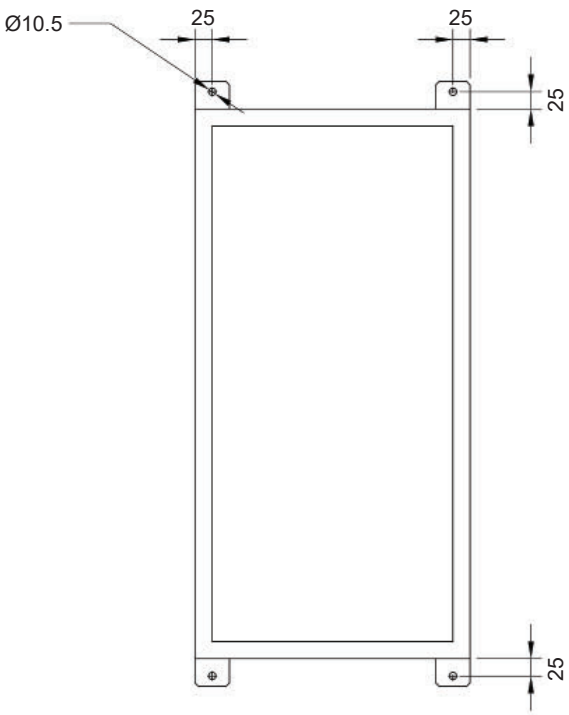

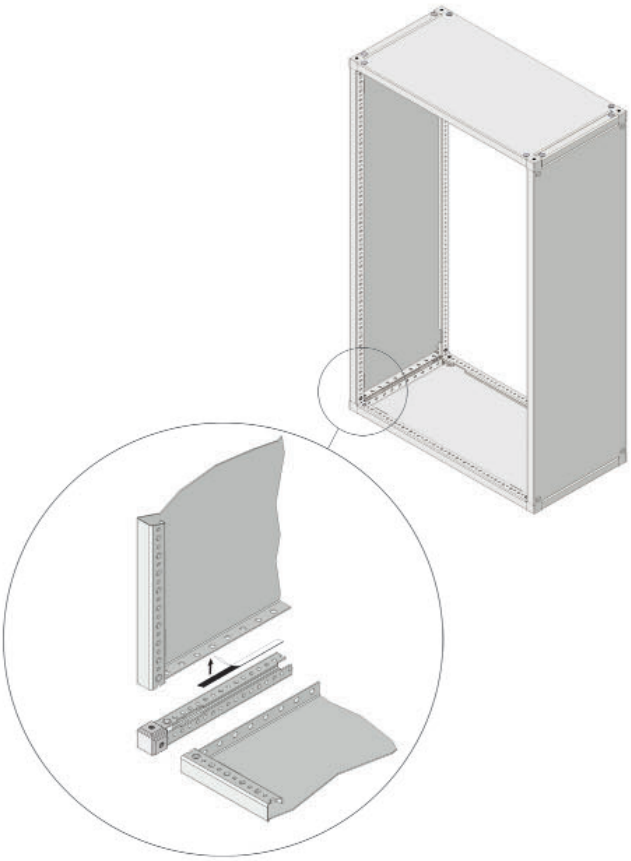

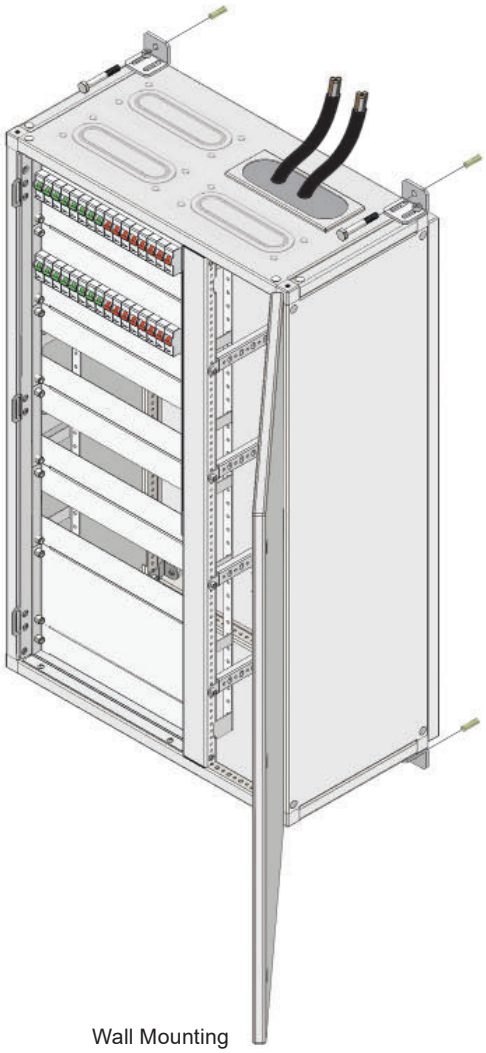

Wall Mounting

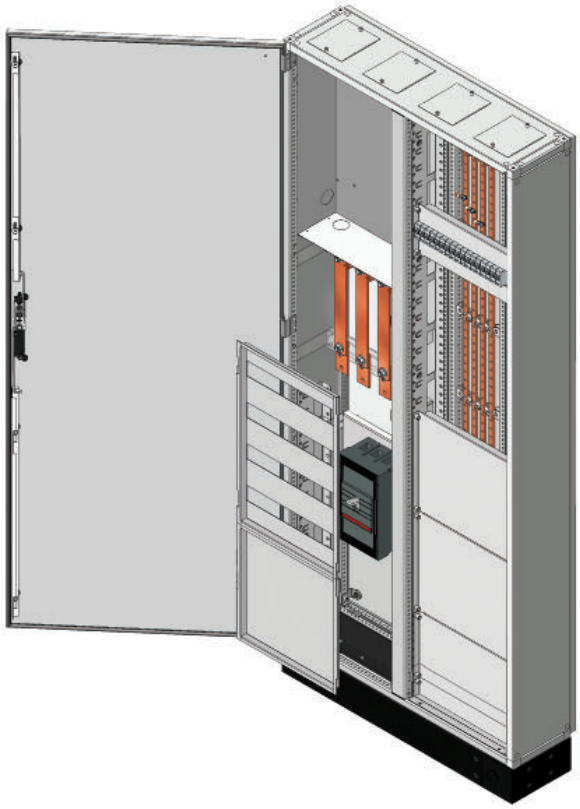

Floorstanding

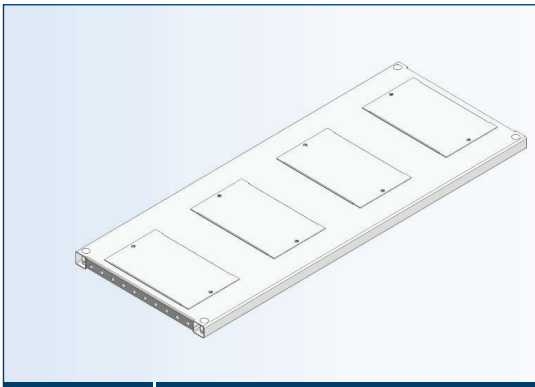

INSTANT PLATE LIGHT WITH GLAND

INSTANT PLADE LIGHT MED FLANGER

TYPE	DESCRIPTION	SIZE (W×D)	WEIGHT (kg)	ORDER No. RAL 7035 FTF.
INLG 6.2	INSTANT PLATE LIGHT WITH GLAND	600 x 200	1.52	80834
INLG 8.2	INSTANT PLATE LIGHT WITH GLAND	800 x 200	2.10	80844
INLG 10.2	INSTANT PLATE LIGHT WITH GLAND	1000 x 200	2.60	80854
INLG 12.2	INSTANT PLATE LIGHT WITH GLAND	1200 x 200	3.50	80864
INLG 14.2	INSTANT PLATE LIGHT WITH GLAND	1400 x 200	3.65	80874
INLG 16.2	INSTANT PLATE LIGHT WITH GLAND	1600 x 200	4.10	80884
INLG 6.3	INSTANT PLATE LIGHT WITH GLAND	600 x 300	2.00	80894
INLG 8.3	INSTANT PLATE LIGHT WITH GLAND	800 x 300	2.70	80904
INLG 10.3	INSTANT PLATE LIGHT WITH GLAND	1000 x 300	3.40	80914
INLG 12.3	INSTANT PLATE LIGHT WITH GLAND	1200 x 300	4.06	80924
INLG 14.3	INSTANT PLATE LIGHT WITH GLAND	1400 x 300	4.80	80934
INLG 16.3	INSTANT PLATE LIGHT WITH GLAND	1600 x 300	5.50	80944

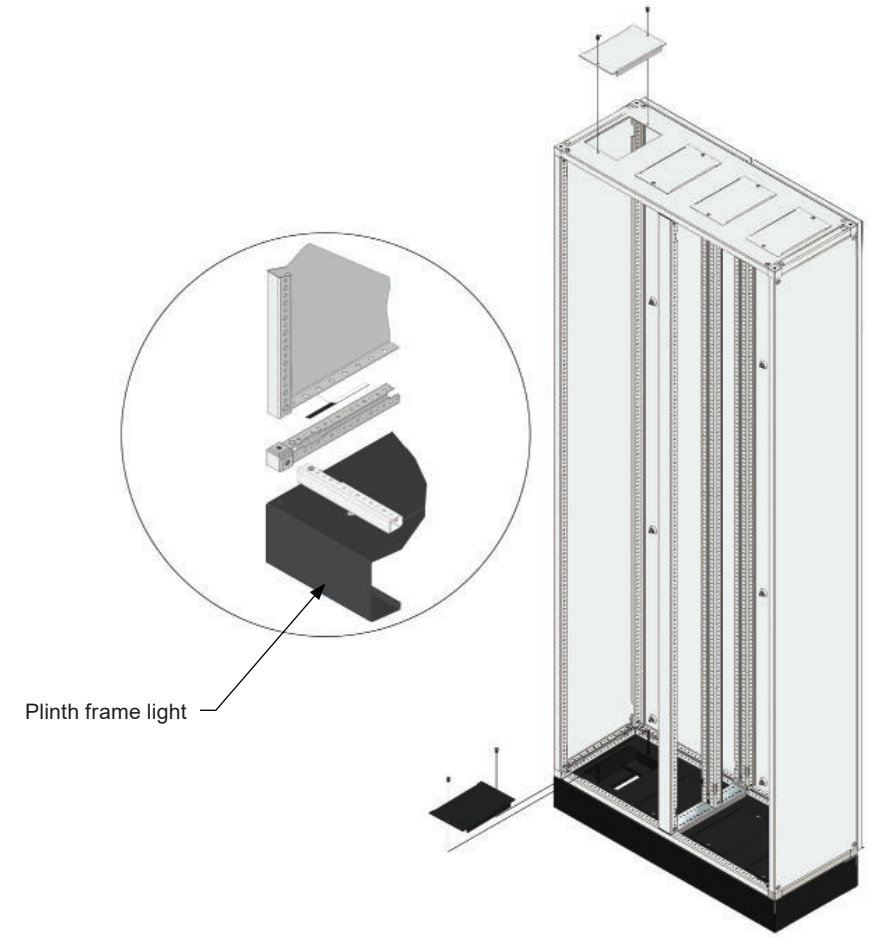

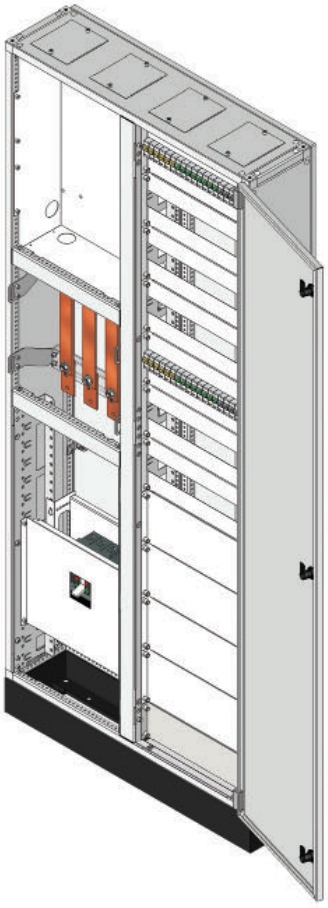

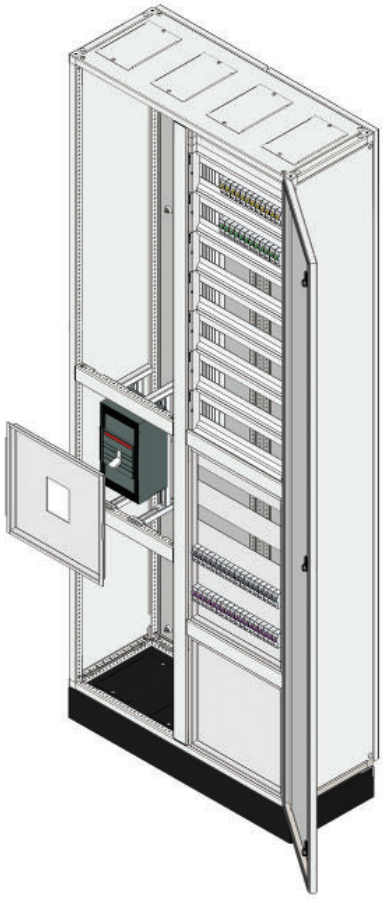

With TM inserts

INSTANT PLATE LIGHT WITH GLAND HOLES

INSTANT PLADE LIGHT MED FLANGE HULLER

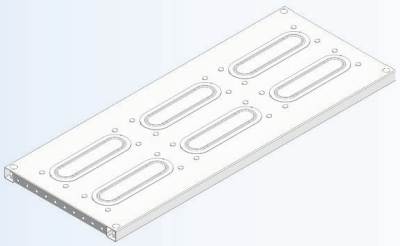

FL 21 Glands

TYPE	DESCRIPTION	SIZE (W×D)	NO.OF GLANDS	WEIGHT (kg)	ORDER No. RAL 7035 SMF.
INLGD 4.2-1	INS. PLATE LIGHT WITH GLAND HOLES	400 X 200	1	1.02	65044
INLGD 6.2-1	INS. PLATE LIGHT WITH GLAND HOLES	600 X 200	2	1.52	65054
INLGD 8.2-1	INS. PLATE LIGHT WITH GLAND HOLES	800 X 200	3	2.10	65064
INLGD 10.2-1	INS. PLATE LIGHT WITH GLAND HOLES	1000 X 200	4	2.60	65074
INLGD 12.2-1	INS. PLATE LIGHT WITH GLAND HOLES	1200 X 200	5	3.50	65084
INLGD 14.2-1	INS. PLATE LIGHT WITH GLAND HOLES	1400 X 200	5	3.65	65094
INLGD 16.2-1	INS. PLATE LIGHT WITH GLAND HOLES	1600 X 200	6	4.10	65104
INLGD 4.3-1	INS. PLATE LIGHT WITH GLAND HOLES	400 X 300	2	1.34	65114
INLGD 6.3-1	INS. PLATE LIGHT WITH GLAND HOLES	600 X 300	4	2.00	65124
INLGD 8.3-1	INS. PLATE LIGHT WITH GLAND HOLES	800 X 300	6	2.70	65134
INLGD 10.3-1	INS. PLATE LIGHT WITH GLAND HOLES	1000 X 300	8	3.40	65144
INLGD 12.3-1	INS. PLATE LIGHT WITH GLAND HOLES	1200 X 300	10	4.06	65154
INLGD 14.3-1	INS. PLATE LIGHT WITH GLAND HOLES	1400 X 300	10	4.80	65164
INLGD 16.3-1	INS. PLATE LIGHT WITH GLAND HOLES	1600 X 300	12	5.50	65174

INSTANT PLATE LIGHT WITH GLAND HOLES & CORNERS

INSTANT PLADE LIGHT MED FLANGE HULLER OG HJØRNER

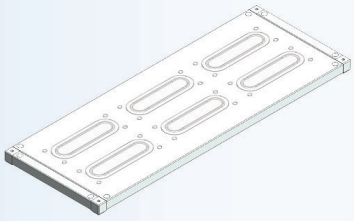

With corner assembly kit

FL21 Glands

TYPE	DESCRIPTION	SIZE (W×D)	NO.OF GLANDS	WEIGHT (kg)	ORDER No. RAL 7035 FTF.
INLGC 4.2-1	INS. PL. LIGHT WITH GLAND HOLES & CORNERS	400 X 200	1	1.58	65764
INLGC 6.2-1	INS. PL. LIGHT WITH GLAND HOLES & CORNERS	600 X 200	2	2.12	65804
INLGC 8.2-1	INS. PL. LIGHT WITH GLAND HOLES & CORNERS	800 X 200	3	2.70	65814
INLGC 10.2-1	INS. PL. LIGHT WITH GLAND HOLES & CORNERS	1000 X 200	4	3.20	65824
INLGC 12.2-1	INS. PL. LIGHT WITH GLAND HOLES & CORNERS	1200 X 200	5	4.10	65834
INLGC 14.2-1	INS. PL. LIGHT WITH GLAND HOLES & CORNERS	1400 X 200	5	4.25	65784
INLGC 16.2-1	INS. PL. LIGHT WITH GLAND HOLES & CORNERS	1600 X 200	6	4.10	65794
INLGC 4.3-1	INS. PL. LIGHT WITH GLAND HOLES & CORNERS	400 X 300	2	2.03	65774
INLGC 6.3-1	INS. PL. LIGHT WITH GLAND HOLES & CORNERS	600 X 300	4	2.73	65844
INLGC 8.3-1	INS. PL. LIGHT WITH GLAND HOLES & CORNERS	800 X 300	6	3.43	65854
INLGC 10.3-1	INS. PL. LIGHT WITH GLAND HOLES & CORNERS	1000 X 300	8	4.13	65864
INLGC 12.3-1	INS. PL. LIGHT WITH GLAND HOLES & CORNERS	1200 X 300	10	4.79	65874
INLGC 14.3-1	INS. PL. LIGHT WITH GLAND HOLES & CORNERS	1400 X 300	10	5.53	65884
INLGC 16.3-1	INS. PL. LIGHT WITH GLAND HOLES & CORNERS	1600 X 300	12	6.23	65894

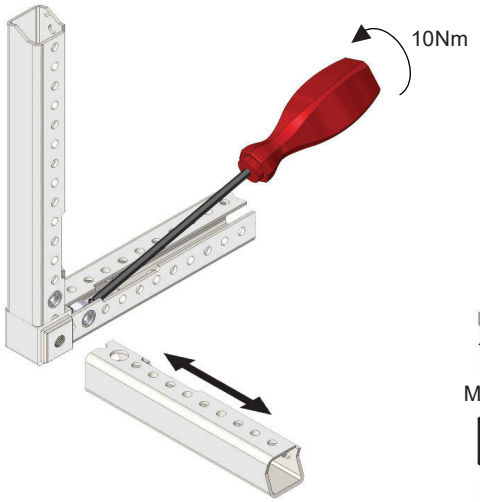
10Nm

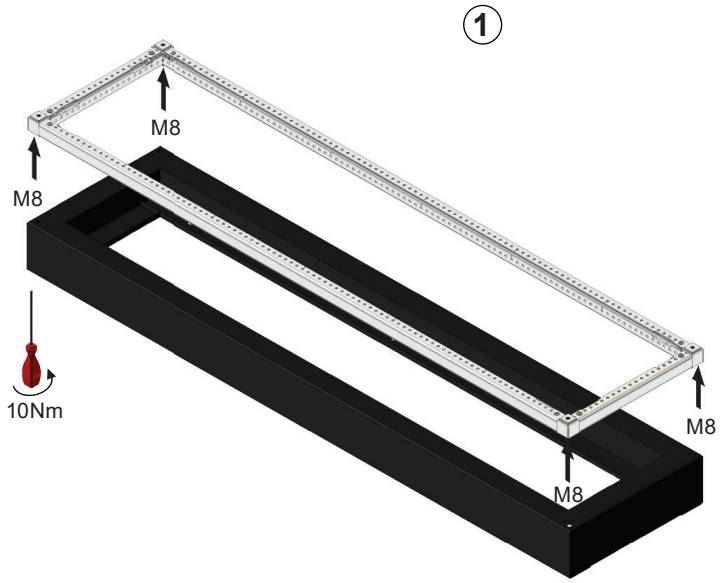
1
M8
M8
10Nm
M8
M8

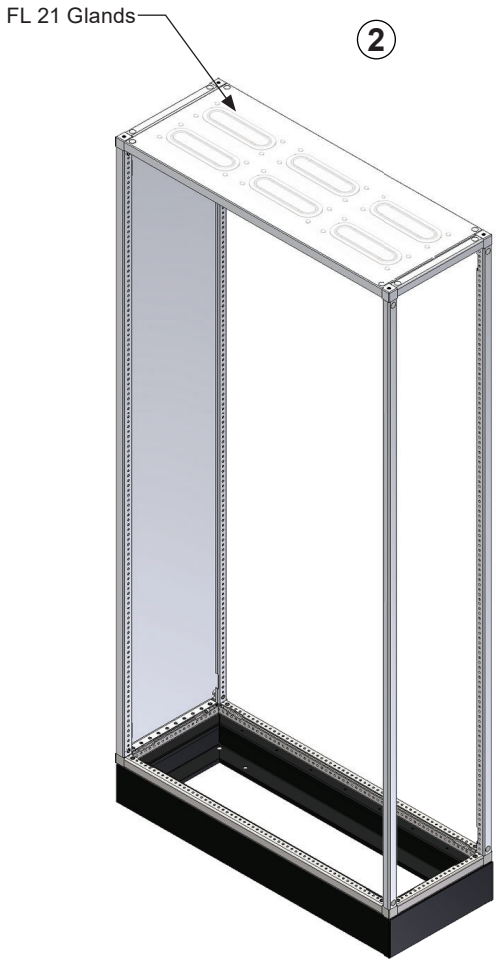
FL 21 Glands
2

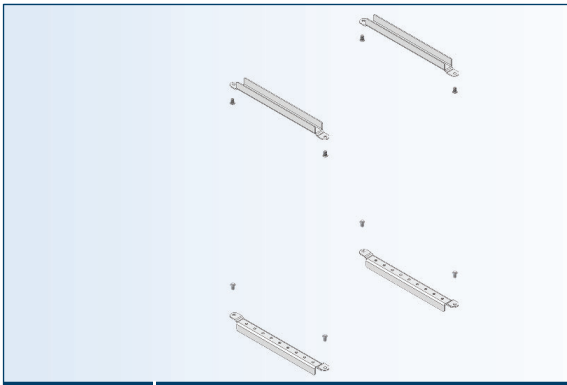

INSTANT PANEL DEPTH PROFILES (FOR MOUNTING PLATE)

INSTANT PLADE DYBDE PROFIL (TIL MONTAGE PLADE)

TYPE	DESCRIPTION	PANEL DEPTH	WEIGHT (kg)	ORDER No. RAL 9010 SMF.
IPDP 2	INSTANT PANEL DEPTH PROFILES	200	0.60	80410
IPDP 3	INSTANT PANEL DEPTH PROFILES	300	0.92	80412
IPDP 4	INSTANT PANEL DEPTH PROFILES	400	1.32	80414

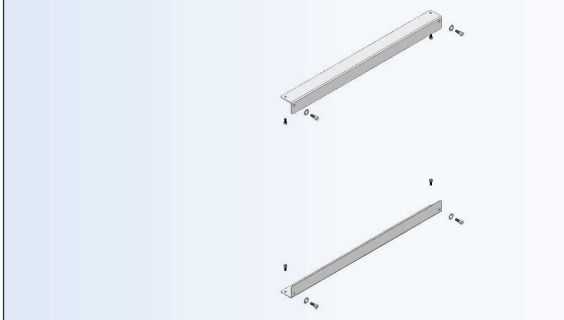

INSTANT PANEL WIDTH PROFILES (FOR MOUNTING PLATE)

INSTANT PLADE VINKEL PROFIL (TIL MONTAGE PLADE)

TYPE	DESCRIPTION	PANEL WIDTH	WEIGHT (kg)	ORDER No. RAL 9010 SMF.
IPWP 2	INSTANT PANEL WIDTH PROFILES	200	0.4	80420
IPWP 4	INSTANT PANEL WIDTH PROFILES	400	1.03	80422
IPWP 6	INSTANT PANEL WIDTH PROFILES	600	1.63	80424
IPWP 8	INSTANT PANEL WIDTH PROFILES	800	2.23	80426
IPWP 10	INSTANT PANEL WIDTH PROFILES	1000	2.82	80428
IPWP 12	INSTANT PANEL WIDTH PROFILES	1200	3.26	80430

For V1 Mounting plate

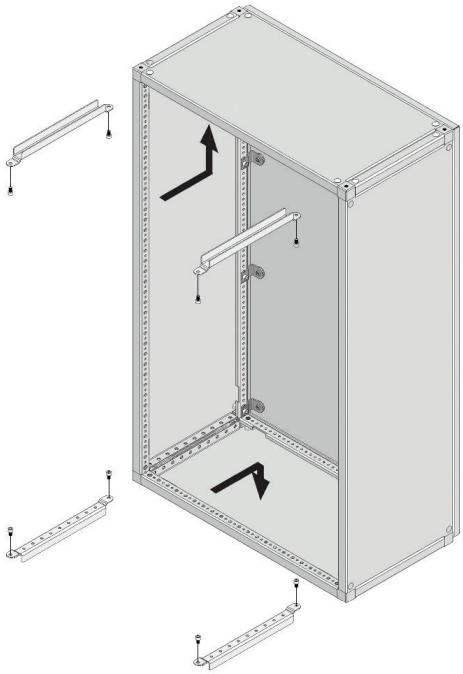

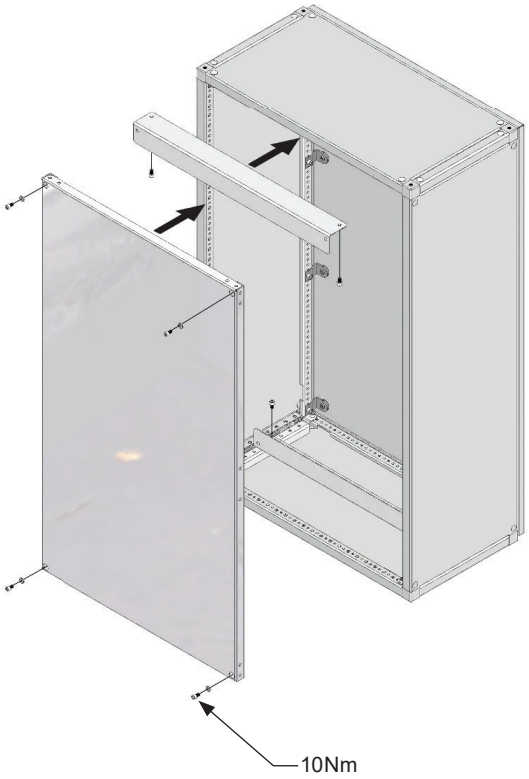
10Nm

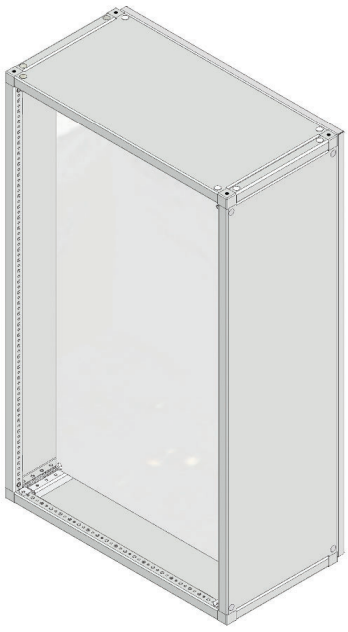

GLAND PLATE

FLANGER

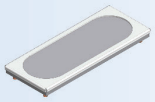

Quick gland plate

Steel gland plate

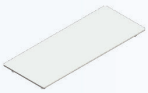

Steel gland plate with stud

TYPE	DESCRIPTION	SIZE (W×H)	WEIGHT (kg)	ORDER No. RAL 7035 FTF.
QG	QUICK GLAND PLATE	216 × 86	0.32	14734
SG 216	STEEL GLAND PLATE	216 × 86	0.24	14724
SGSG 216	STEEL GLAND PLATE WITH STUD	216 × 86	0.32	51005

FL21 GLAND PLATE

FL21 FLANGER

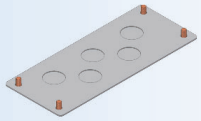

Without Gasket

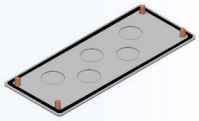

With Gasket

TYPE	DESCRIPTION	GLAND PLATE SIZE (W×H)	CABLE HOLE SIZE (Ø)	NO. OF CABLE HOLES	WEIGHT (kg)	ORDER No. Without Gasket RAL 7035 FTF.	ORDER No. With Gasket RAL 7035 FTF.
FL21-12	FL21 GLAND PLATE	214 × 88	12	23	0.220	66334	66339
FL21-16	FL21 GLAND PLATE	214 × 88	16	14	0.219	66344	66349
FL21-16.20	FL21 GLAND PLATE	214 × 88	16/20	8/6	0.217	66354	66359
FL21-20	FL21 GLAND PLATE	214 × 88	20	10	0.215	66364	66369
FL21-25	FL21 GLAND PLATE	214 × 88	25	5	0.224	66374	66379
FL21-32	FL21 GLAND PLATE	214 × 88	32	3	0.227	66384	66389
FL21-40	FL21 GLAND PLATE	214 × 88	40	3	0.210	66394	66399
FL21-50	FL21 GLAND PLATE	214 × 88	50	2	0.208	66404	66409

Tip!
Quick glands saves installation time.

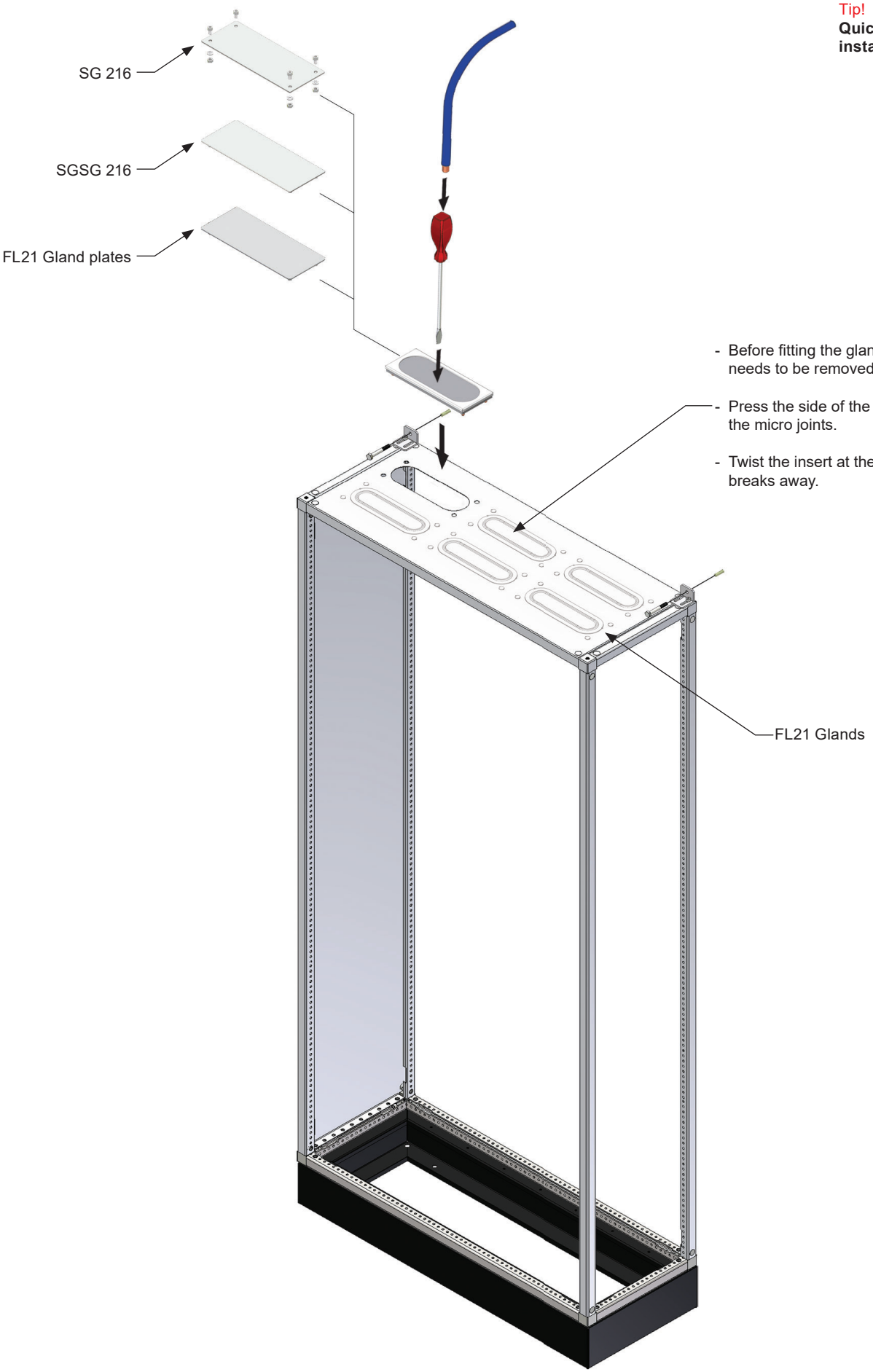

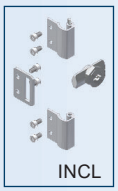

DOOR LIGHT

DØR LIGHT

TYPE	DESCRIPTION	SIZE (W×H)	LOCKS	WEIGHT (kg)	VERSION 3 ORDER No. RAL 7035 FTF.
DOL 2.2	DOOR LIGHT	200 × 200	1	0.51	18407
DOL 2.4	DOOR LIGHT	200 × 400	2	0.92	18417
DOL 2.6	DOOR LIGHT	200 × 600	2	1.33	18427
DOL 2.8	DOOR LIGHT	200 × 800	3	1.75	18437
DOL 2.10	DOOR LIGHT	200 × 1000	3	2.16	18447
DOL 2.12	DOOR LIGHT	200 × 1200	3	2.58	18457
DOL 2.14	DOOR LIGHT	200 × 1400	3	2.99	18467
DOL 2.16	DOOR LIGHT	200 × 1600	4	3.41	18477
DOL 2.18	DOOR LIGHT	200 × 1800	4	3.82	18487
DOL 2.20	DOOR LIGHT	200 × 2000	4	4.24	18497
DOL 3.2	DOOR LIGHT	300 × 200	1	0.76	27887
DOL 3.4	DOOR LIGHT	300 × 400	2	1.07	27897
DOL 3.6	DOOR LIGHT	300 × 600	2	1.50	27907
DOL 3.8	DOOR LIGHT	300 × 800	3	1.92	27917
DOL 3.10	DOOR LIGHT	300 × 1000	3	2.40	27927
DOL 3.12	DOOR LIGHT	300 × 1200	3	2.76	28047
DOL 3.14	DOOR LIGHT	300 × 1400	3	3.17	28057
DOL 3.16	DOOR LIGHT	300 × 1600	4	3.66	28067
DOL 3.18	DOOR LIGHT	300 × 1800	4	4.01	28077
DOL 3.20	DOOR LIGHT	300 × 2000	4	4.60	28087
DOL 4.2	DOOR LIGHT	400 × 200	1	0.92	18527
DOL 4.3	DOOR LIGHT	400 × 300	1	1.10	18517
DOL 4.4	DOOR LIGHT	400 × 400	2	1.67	18537
DOL 4.6	DOOR LIGHT	400 × 600	2	2.43	18547
DOL 4.8	DOOR LIGHT	400 × 800	3	3.18	18557
DOL 4.10	DOOR LIGHT	400 × 1000	3	3.94	18567
DOL 4.12	DOOR LIGHT	400 × 1200	3	4.69	18577
DOL 4.14	DOOR LIGHT	400 × 1400	3	5.45	18587
DOL 4.16	DOOR LIGHT	400 × 1600	4	6.20	18597
DOL 4.18	DOOR LIGHT	400 × 1800	4	6.96	18607
DOL 4.20	DOOR LIGHT	400 × 2000	4	7.71	18617
DOL 5.2	DOOR LIGHT	500 × 200	1	1.20	27937
DOL 5.4	DOOR LIGHT	500 × 400	2	1.99	27947
DOL 5.6	DOOR LIGHT	500 × 600	2	2.77	27957
DOL 5.8	DOOR LIGHT	500 × 800	3	3.56	27967
DOL 5.10	DOOR LIGHT	500 × 1000	3	4.34	27977
DOL 5.12	DOOR LIGHT	500 × 1200	3	5.13	28097
DOL 5.14	DOOR LIGHT	500 × 1400	3	5.91	28107
DOL 5.16	DOOR LIGHT	500 × 1600	4	6.70	28117
DOL 5.18	DOOR LIGHT	500 × 1800	4	7.48	28127
DOL 5.20	DOOR LIGHT	500 × 2000	4	8.27	28137
DOL 6.2	DOOR LIGHT	600 × 200	1	1.33	18637
DOL 6.3	DOOR LIGHT	600 × 300	1	1.52	18737
DOL 6.4	DOOR LIGHT	600 × 400	2	2.43	18647
DOL 6.6	DOOR LIGHT	600 × 600	2	3.52	18657
DOL 6.8	DOOR LIGHT	600 × 800	3	4.62	18667
DOL 6.10	DOOR LIGHT	600 × 1000	3	5.71	18677
DOL 6.12	DOOR LIGHT	600 × 1200	3	6.81	18687
DOL 6.14	DOOR LIGHT	600 × 1400	3	7.90	18697
DOL 6.16	DOOR LIGHT	600 × 1600	4	8.99	18707
DOL 6.18	DOOR LIGHT	600 × 1800	4	10.09	18717
DOL 6.20	DOOR LIGHT	600 × 2000	4	11.18	18727
DOL 8.14	DOOR LIGHT	800 × 1400	3	10.35	18867
DOL 8.16	DOOR LIGHT	800 × 1600	4	11.78	18877
DOL 8.18	DOOR LIGHT	800 × 1800	4	13.22	18887
DOL 8.20	DOOR LIGHT	800 × 2000	4	14.65	18897

* Use door cable holder as door stiffener for 800 wide.

TYPE	DESCRIPTION	WEIGHT (kg)	VERSION 3 ORDER NO.
GBFD	GUIDE BRACKET FOR DOOR	0.038	11109

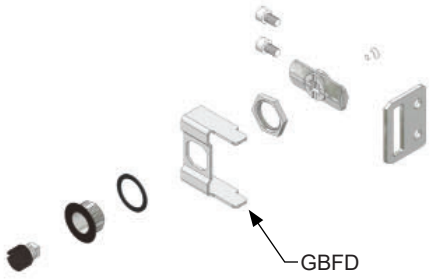

ORDER INFORMATION

ORDER No.	DESCRIPTION
xxxxx-02	Door with Plastic Lock - Steel Cam
xxxxx-03	Door with Knob Lock - Plastic
xxxxx-04	Door with Knob Lock - Steel Black
xxxxx-05	Door with Knob Lock - Stainless Steel
xxxxx-06	Door with Guide Brackets
xxxxx-07	Door with Plastic Lock

DOOR LIGHT WITH SWING HANDLE

DØR MED SVING HÅNDTAG

TYPE	DESCRIPTION	SIZE (W×H)	WEIGHT (kg)	VERSION 3 ORDER No. RAL 7035 FTF.
DLSH 3.10	DOOR LIGHT WITH SWING HANDLE	300 × 1000	4.03	81727
DLSH 3.12	DOOR LIGHT WITH SWING HANDLE	300 × 1200	4.50	81737
DLSH 3.14	DOOR LIGHT WITH SWING HANDLE	300 × 1400	4.97	81747
DLSH 3.16	DOOR LIGHT WITH SWING HANDLE	300 × 1600	5.44	81757
DLSH 3.18	DOOR LIGHT WITH SWING HANDLE	300 × 1800	5.91	81767
DLSH 3.20	DOOR LIGHT WITH SWING HANDLE	300 × 2000	6.39	81777
DLSH 4.10	DOOR LIGHT WITH SWING HANDLE	400 × 1000	4.82	81507
DLSH 4.12	DOOR LIGHT WITH SWING HANDLE	400 × 1200	5.71	81517
DLSH 4.14	DOOR LIGHT WITH SWING HANDLE	400 × 1400	6.81	81527
DLSH 4.16	DOOR LIGHT WITH SWING HANDLE	400 × 1600	7.90	81537
DLSH 4.18	DOOR LIGHT WITH SWING HANDLE	400 × 1800	7.96	81547
DLSH 4.20	DOOR LIGHT WITH SWING HANDLE	400 × 2000	10.09	81557
DLSH 5.10	DOOR LIGHT WITH SWING HANDLE	500 × 1000	5.60	81787
DLSH 5.12	DOOR LIGHT WITH SWING HANDLE	500 × 1200	6.39	81797
DLSH 5.14	DOOR LIGHT WITH SWING HANDLE	500 × 1400	7.16	81807
DLSH 5.16	DOOR LIGHT WITH SWING HANDLE	500 × 1600	7.96	81817
DLSH 5.18	DOOR LIGHT WITH SWING HANDLE	500 × 1800	8.74	81827
DLSH 5.20	DOOR LIGHT WITH SWING HANDLE	500 × 2000	9.53	81837
DLSH 6.10	DOOR LIGHT WITH SWING HANDLE	600 × 1000	5.71	81587
DLSH 6.12	DOOR LIGHT WITH SWING HANDLE	600 × 1200	6.81	81597
DLSH 6.14	DOOR LIGHT WITH SWING HANDLE	600 × 1400	7.90	81607
DLSH 6.16	DOOR LIGHT WITH SWING HANDLE	600 × 1600	7.96	81617
DLSH 6.18	DOOR LIGHT WITH SWING HANDLE	600 × 1800	10.09	81627
DLSH 6.20	DOOR LIGHT WITH SWING HANDLE	600 × 2000	11.18	81637

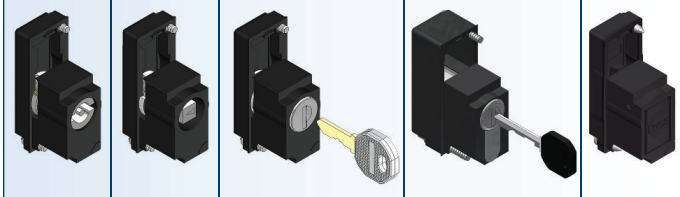

LOCK INSERTS (FOR SWING HANDLE)

LÅSE (TIL SVING HÅNDTAG)

TYPE	DESCRIPTION	WEIGHT (kg)	ORDER No. Non locking	ORDER No. Keyed alike	ORDER No. Keyed different
DOB 3	DOUBLE BIT 3 LOCK INSERT	0.06	12100	-	-
SQ 8	SQUARE LOCK INSERT 8 mm	0.05	12105	-	-
KLSH	KEY LOCK INSERT	0.07	-	12111	12112
KLSHC	KEY LOCK INSERT CL-001	0.11	-	12134	-
PLSH	PUSH LOCK INSERT	0.08	12117	-	-

Other insert options are available on request

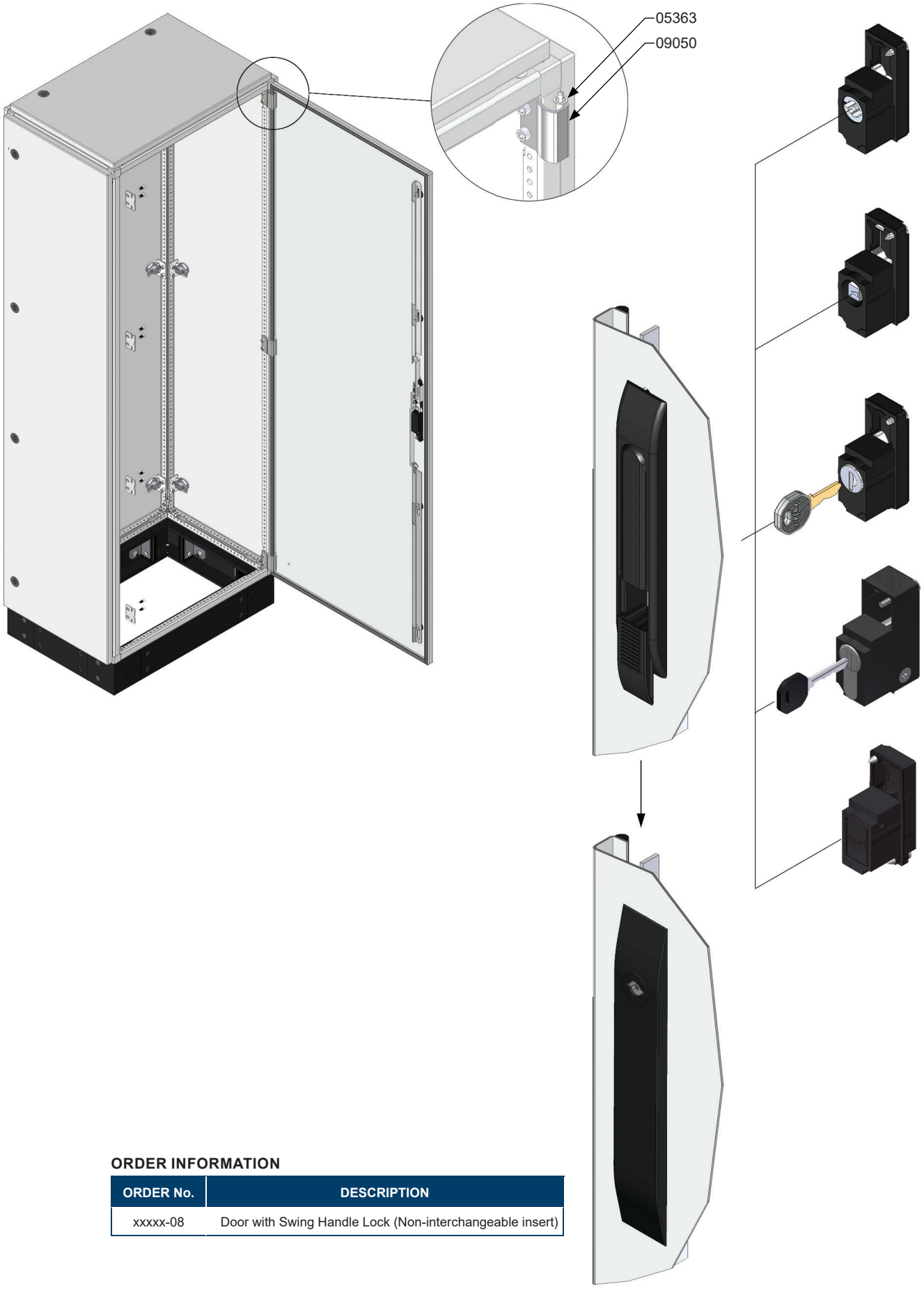

ORDER INFORMATION

ORDER No.	DESCRIPTION
xxxxx-08	Door with Swing Handle Lock (Non-interchangeable insert)

DOOR LIGHT
WITH NORWEGIAN LOCK

DØR MED SVING
HÅNDTAG NORSK LÅS

TYPE	DESCRIPTION	SIZE (W×H)	WEIGHT (kg)	VERSION 3 ORDER No. RAL 7035 FTF.
DWNL 3.10	DOOR LIGHT WITH NORWEGIAN LOCK	300 × 1000	4.03	82007
DWNL 3.12	DOOR LIGHT WITH NORWEGIAN LOCK	300 × 1200	4.50	82017
DWNL 3.14	DOOR LIGHT WITH NORWEGIAN LOCK	300 × 1400	4.97	82027
DWNL 3.16	DOOR LIGHT WITH NORWEGIAN LOCK	300 × 1600	5.44	82037
DWNL 3.18	DOOR LIGHT WITH NORWEGIAN LOCK	300 × 1800	5.91	82047
DWNL 3.20	DOOR LIGHT WITH NORWEGIAN LOCK	300 × 2000	6.39	82057
DWNL 4.10	DOOR LIGHT WITH NORWEGIAN LOCK	400 × 1000	4.82	82067
DWNL 4.12	DOOR LIGHT WITH NORWEGIAN LOCK	400 × 1200	5.71	82077
DWNL 4.14	DOOR LIGHT WITH NORWEGIAN LOCK	400 × 1400	6.81	82087
DWNL 4.16	DOOR LIGHT WITH NORWEGIAN LOCK	400 × 1600	7.90	82097
DWNL 4.18	DOOR LIGHT WITH NORWEGIAN LOCK	400 × 1800	7.96	82107
DWNL 4.20	DOOR LIGHT WITH NORWEGIAN LOCK	400 × 2000	10.09	82117
DWNL 5.10	DOOR LIGHT WITH NORWEGIAN LOCK	500 × 1000	5.60	82127
DWNL 5.12	DOOR LIGHT WITH NORWEGIAN LOCK	500 × 1200	6.39	82137
DWNL 5.14	DOOR LIGHT WITH NORWEGIAN LOCK	500 × 1400	7.17	82147
DWNL 5.16	DOOR LIGHT WITH NORWEGIAN LOCK	500 × 1600	7.96	82157
DWNL 5.18	DOOR LIGHT WITH NORWEGIAN LOCK	500 × 1800	8.74	82167
DWNL 5.20	DOOR LIGHT WITH NORWEGIAN LOCK	500 × 2000	9.53	82177
DWNL 6.10	DOOR LIGHT WITH NORWEGIAN LOCK	600 × 1000	5.71	82187
DWNL 6.12	DOOR LIGHT WITH NORWEGIAN LOCK	600 × 1200	6.81	82197
DWNL 6.14	DOOR LIGHT WITH NORWEGIAN LOCK	600 × 1400	7.90	82207
DWNL 6.16	DOOR LIGHT WITH NORWEGIAN LOCK	600 × 1600	7.96	82217
DWNL 6.18	DOOR LIGHT WITH NORWEGIAN LOCK	600 × 1800	10.09	82227
DWNL 6.20	DOOR LIGHT WITH NORWEGIAN LOCK	600 × 2000	11.18	82237

×50 Nos.

KNOB LOCK

FINGER LÅS

TYPE	DESCRIPTION	WEIGHT (kg)	VERSION 3 ORDER No. Polyamide black
KL	KNOB LOCK - Plastic	0.005	12106

* Knob Lock - Plastic (KL) is not compatible with Steel Lock.

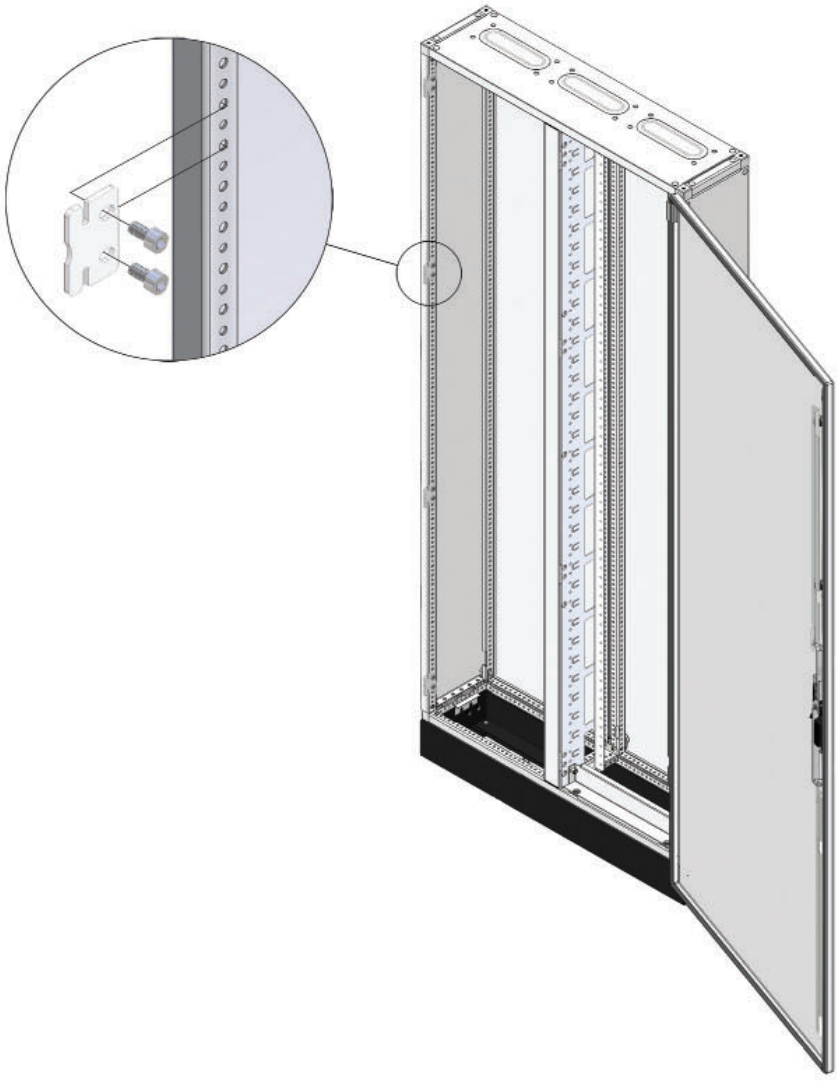

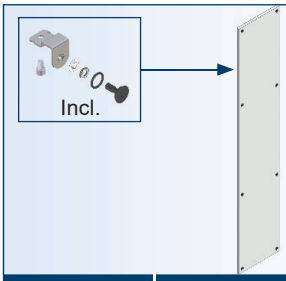

COVER LIGHT

AFDÆKNING LIGHT

TYPE	DESCRIPTION	SIZE (W×H)	WEIGHT (kg)	VERSION 3 ORDER No. RAL 7035 FTF.
COVL 2.2	COVER LIGHT	200 × 200	0.51	19607
COVL 2.4	COVER LIGHT	200 × 400	0.92	19617
COVL 2.6	COVER LIGHT	200 × 600	1.33	19627
COVL 2.8	COVER LIGHT	200 × 800	1.75	19637
COVL 2.10	COVER LIGHT	200 × 1000	2.16	19647
COVL 2.12	COVER LIGHT	200 × 1200	2.58	19657
COVL 2.14	COVER LIGHT	200 × 1400	2.99	19667
COVL 2.16	COVER LIGHT	200 × 1600	3.41	19677
COVL 2.18	COVER LIGHT	200 × 1800	3.82	19687
COVL 2.20	COVER LIGHT	200 × 2000	4.24	19697
COVL 3.2	COVER LIGHT	300 × 200	0.76	19707
COVL 3.4	COVER LIGHT	300 × 400	1.07	19717
COVL 3.6	COVER LIGHT	300 × 600	1.50	19727
COVL 3.8	COVER LIGHT	300 × 800	1.92	19737
COVL 3.10	COVER LIGHT	300 × 1000	2.40	19747
COVL 3.12	COVER LIGHT	300 × 1200	2.76	19757
COVL 3.14	COVER LIGHT	300 × 1400	3.17	19767
COVL 3.16	COVER LIGHT	300 × 1600	3.66	19777
COVL 3.18	COVER LIGHT	300 × 1800	4.01	19787
COVL 3.20	COVER LIGHT	300 × 2000	4.60	19797
COVL 4.4	COVER LIGHT	400 × 400	1.67	19807
COVL 4.6	COVER LIGHT	400 × 600	2.43	19817
COVL 4.8	COVER LIGHT	400 × 800	3.18	19827
COVL 4.10	COVER LIGHT	400 × 1000	3.94	19837
COVL 4.12	COVER LIGHT	400 × 1200	4.69	19847
COVL 4.14	COVER LIGHT	400 × 1400	5.45	19857
COVL 4.16	COVER LIGHT	400 × 1600	6.20	19867
COVL 4.18	COVER LIGHT	400 × 1800	6.96	19877
COVL 4.20	COVER LIGHT	400 × 2000	7.71	19887
COVL 5.2	COVER LIGHT	500 × 200	1.20	28907
COVL 5.4	COVER LIGHT	500 × 400	1.99	28917
COVL 5.6	COVER LIGHT	500 × 600	2.77	28927
COVL 5.8	COVER LIGHT	500 × 800	3.56	28937
COVL 5.10	COVER LIGHT	500 × 1000	4.34	28947
COVL 5.12	COVER LIGHT	500 × 1200	5.13	28957
COVL 5.14	COVER LIGHT	500 × 1400	5.91	28967
COVL 5.16	COVER LIGHT	500 × 1600	6.70	28977
COVL 5.18	COVER LIGHT	500 × 1800	7.48	28987
COVL 5.20	COVER LIGHT	500 × 2000	8.27	28997
COVL 6.6	COVER LIGHT	600 × 600	3.59	19897
COVL 6.8	COVER LIGHT	600 × 800	4.62	19907
COVL 6.10	COVER LIGHT	600 × 1000	5.71	19917
COVL 6.12	COVER LIGHT	600 × 1200	6.81	19927
COVL 6.14	COVER LIGHT	600 × 1400	7.90	19937
COVL 6.16	COVER LIGHT	600 × 1600	8.99	19947
COVL 6.18	COVER LIGHT	600 × 1800	10.09	19957
COVL 6.20	COVER LIGHT	600 × 2000	11.18	19967
COVL 8.14	COVER LIGHT	800 × 1400	10.5	73367
COVL 8.16	COVER LIGHT	800 × 1600	12.4	73377
COVL 8.18	COVER LIGHT	800 × 1800	13.92	73387
COVL 8.20	COVER LIGHT	800 × 2000	15.46	73397

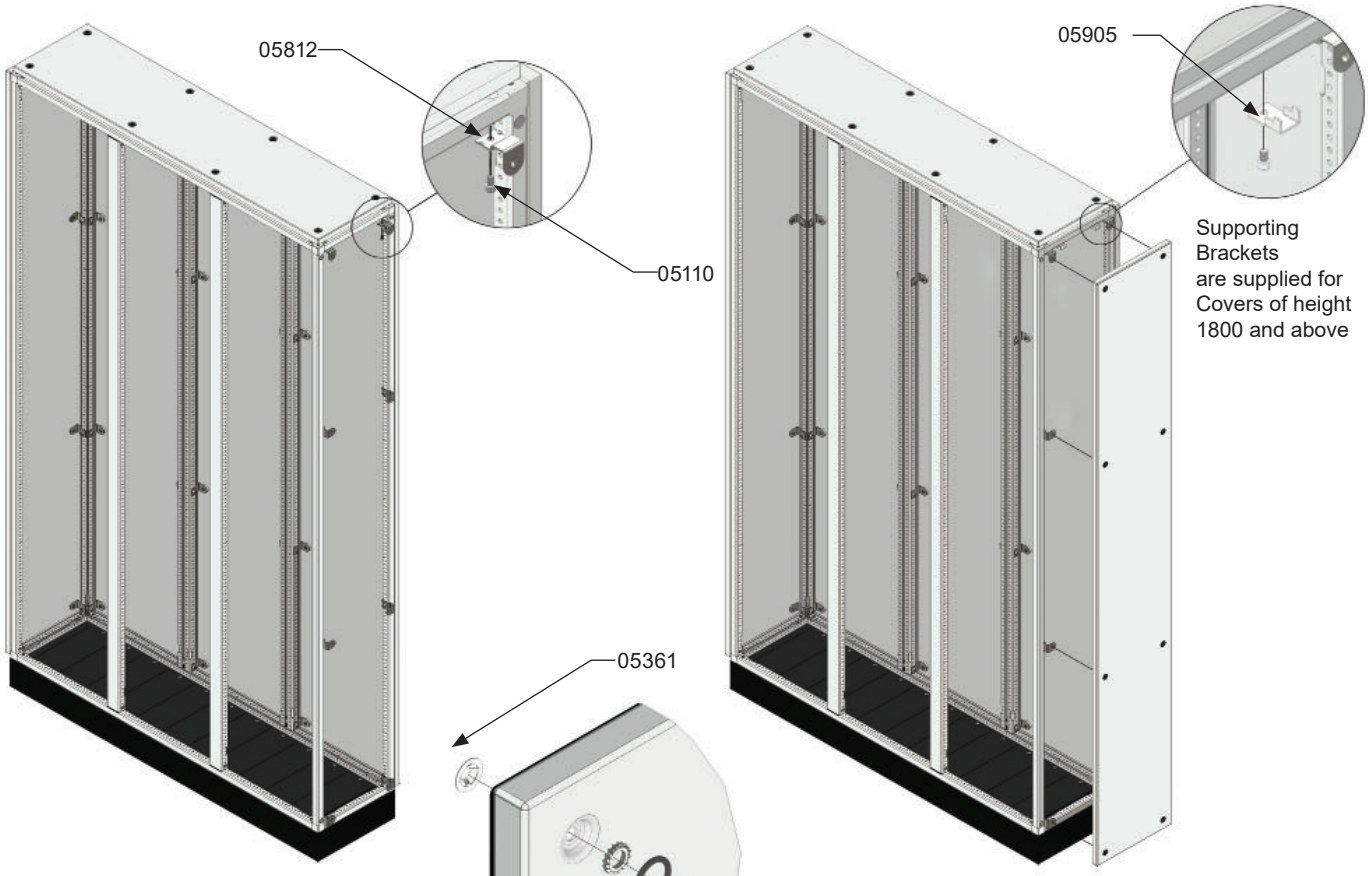

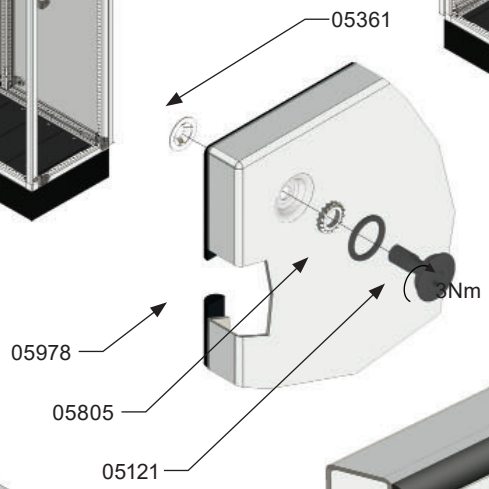

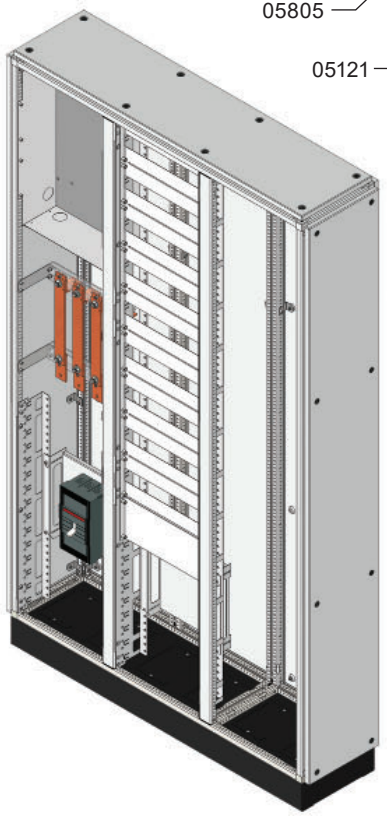

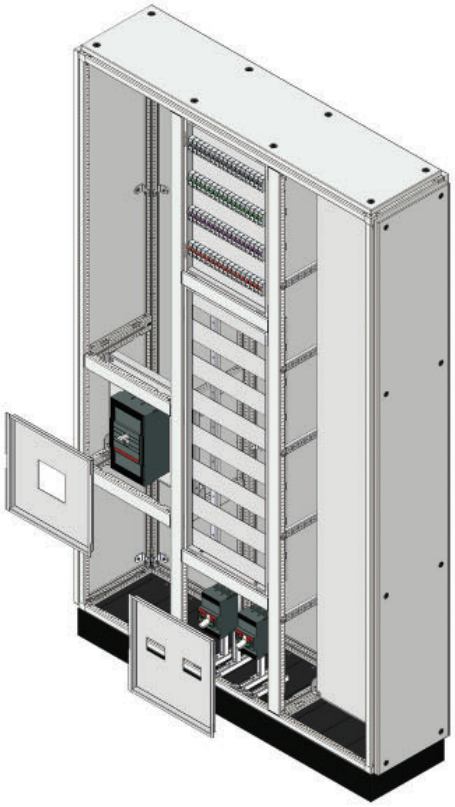

All TM inserts fit

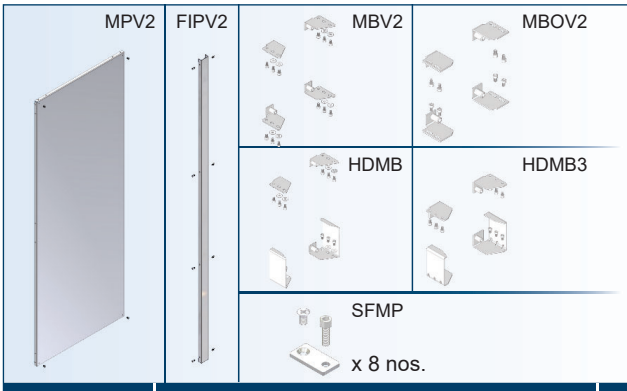

MOUNTING PLATE

MONTAGEPLADER

TYPE	DESCRIPTION	SIZE (W×H)	WEIGHT (kg)	VERSION 2 ORDER No. 2 mm Alu-zinc	VERSION 2 ORDER No. **3 mm** Alu-zinc
MPV2 2.2	MOUNTING PLATE	200 × 200	0.52	19430	-
MPV2 2.4	MOUNTING PLATE	200 × 400	1.15	19431	-
MPV2 2.6	MOUNTING PLATE	200 × 600	1.70	19432	-
MPV2 2.8	MOUNTING PLATE	200 × 800	2.38	19433	-
MPV2 2.10	MOUNTING PLATE	200 × 1000	4.61	19434	-
MPV2 2.12	MOUNTING PLATE	200 × 1200	6.20	19435	-
MPV2 2.14	MOUNTING PLATE	200 × 1400	7.35	19436	-
MPV2 2.16	MOUNTING PLATE	200 × 1600	8.31	19437	-
MPV2 2.18	MOUNTING PLATE	200 × 1800	9.71	19438	-
MPV2 2.20	MOUNTING PLATE	200 × 2000	11.12	19439	-
MPV2 4.3	MOUNTING PLATE	400 × 300	1.51	19461	-
MPV2 4.4	MOUNTING PLATE	400 × 400	2.17	19462	-
MPV2 4.6	MOUNTING PLATE	400 × 600	3.60	19463	-
MPV2 4.8	MOUNTING PLATE	400 × 800	4.51	19464	-
MPV2 4.10	MOUNTING PLATE	400 × 1000	6.02	19465	-
MPV2 4.12	MOUNTING PLATE	400 × 1200	7.41	19466	-
MPV2 4.14	MOUNTING PLATE	400 × 1400	8.65	19467	-
MPV2 4.16	MOUNTING PLATE	400 × 1600	10.11	19468	-
MPV2 4.18	MOUNTING PLATE	400 × 1800	11.31	19469	-
MPV2 4.20	MOUNTING PLATE	400 × 2000	12.31	19470	-
MPV2 6.6	MOUNTING PLATE	600 × 600	5.42	19471	-
MPV2 6.8	MOUNTING PLATE	600 × 800	7.28	19472	-
MPV2 6.10	MOUNTING PLATE	600 × 1000	9.31	19473	-
MPV2 6.12	MOUNTING PLATE	600 × 1200	11.21	19474	-
MPV2 6.14	MOUNTING PLATE	600 × 1400	13.21	19475	-
MPV2 6.16	MOUNTING PLATE	600 × 1600	15.21	19476	-
MPV2 6.18	MOUNTING PLATE	600 × 1800	17.23	19477	-
MPV2 6.20	MOUNTING PLATE	600 × 2000	19.21	19478	19495
MPV2 6.22	MOUNTING PLATE	600 × 2200	21.19	19486	19502
MPV2 8.8	MOUNTING PLATE	800 × 800	10.02	19479	-
MPV2 8.10	MOUNTING PLATE	800 × 1000	12.64	19480	-
MPV2 8.12	MOUNTING PLATE	800 × 1200	15.27	19481	-
MPV2 8.14	MOUNTING PLATE	800 × 1400	17.89	19482	-
MPV2 8.16	MOUNTING PLATE	800 × 1600	20.51	19483	-
MPV2 8.18	MOUNTING PLATE	800 × 1800	23.13	19484	-
MPV2 8.20	MOUNTING PLATE	800 × 2000	25.75	19485	19496
MPV2 8.22	MOUNTING PLATE	800 × 2200	28.37	-	19498
MPV2 10.20	MOUNTING PLATE	1000 × 2000	46.96	-	19499
MPV2 10.22	MOUNTING PLATE	1000 × 2200	51.66	-	19500
MPV2 12.20	MOUNTING PLATE	1200 × 2000	56.36	-	19501
MPV2 12.22	MOUNTING PLATE	1200 × 2200	62.00	-	19497

TYPE	DESCRIPTION	WEIGHT (kg)	VERSION 2 ORDER No.
FIPV2 18	FILLER PROFILE 1800	2.99	19515
FIPV2 20	FILLER PROFILE 2000	3.35	19516
FIPV2 22	FILLER PROFILE 2200	3.71	19517

TYPE	DESCRIPTION	WEIGHT (kg)	VERSION 2 ORDER No.
MBV2	MOUNTING BRACKETS	0.46	19490
MBOV2	MOUNTING BRACKETS WITH OVAL HOLES	0.40	19493
HDMB	HEAVY DUTY MOUNTING BRACKETS	0.82	19491
HDMB3	HEAVY DUTY MOUNTING BRACKETS FOR 3mm	1.25	19492
SFMP	SPACER FOR MOUNTING PLATE	0.02	19494

MBV2

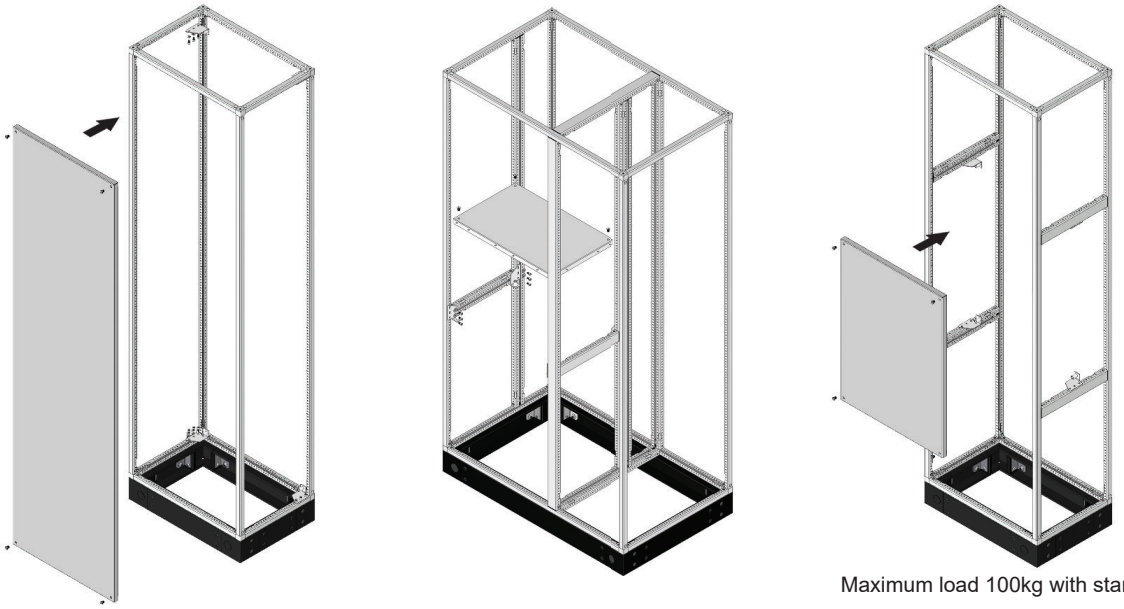

Maximum load 100kg with standard brackets.

MBOV2

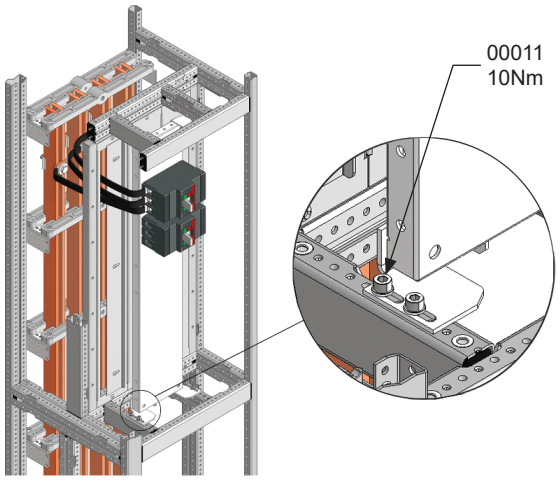

SFMP

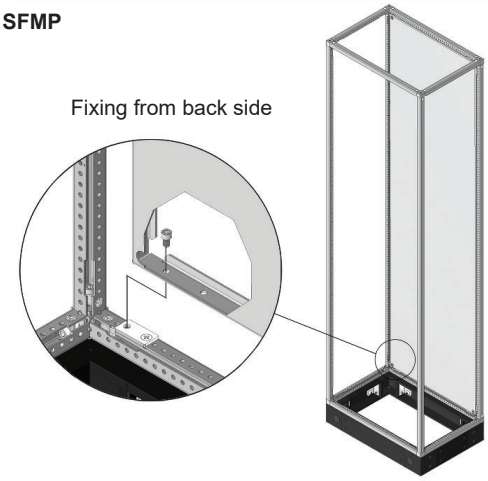

HDMB
HDMB3 When using heavy duty brackets, the top must be mounted with standard brackets.

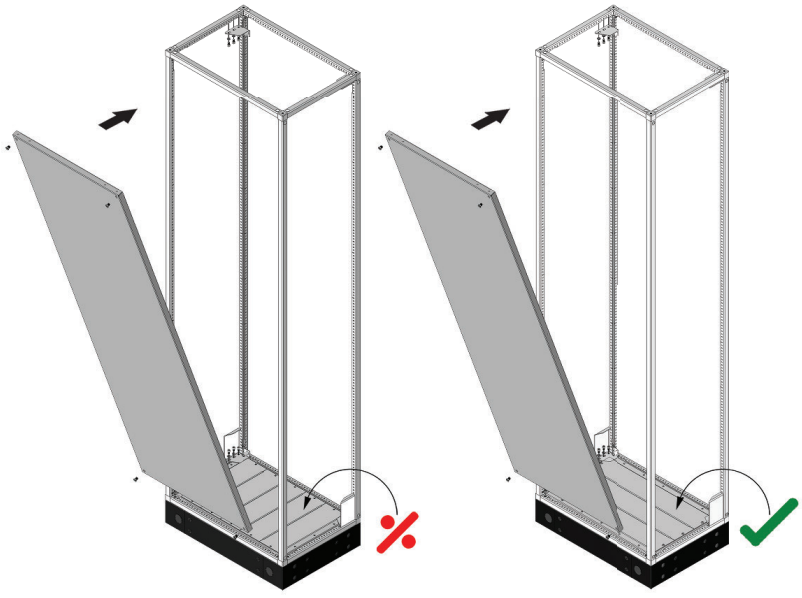

Maximum Load 250kg with heavy duty brackets.
Maximum Load 500kg with 3mm Mounting Plate & heavy duty brackets.

FIPV2

CHASSIS PROFILES

CHASSIS PROFIL

TYPE	DESCRIPTION	MODULAR SIZE	WEIGHT (kg)	ORDER No. RAL 9010 SMF.	ORDER No. RAL 7035 FTF.
CPDB 2	CHASSIS PROFILES	200	0.3	65250	65274
CPDB 4	CHASSIS PROFILES	400	1.1	65260	65191
CPDB 6	CHASSIS PROFILES	600	2.3	65261	65192
CPDB 8	CHASSIS PROFILES	800	2.5	65262	65193
CPDB 10	CHASSIS PROFILES	1000	2.8	65263	65194
CPDB 12	CHASSIS PROFILES	1200	3.1	65264	65195
CPDB 14	CHASSIS PROFILES	1400	3.3	65270	65196
CPDB 16	CHASSIS PROFILES	1600	4.2	65271	65197
CPDB 18	CHASSIS PROFILES	1800	4.6	65272	65198
CPDB 20	CHASSIS PROFILES	2000	5.1	65273	65199

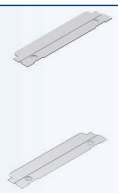

FLAT TOP & BOTTOM PROFILES

FLAD TOP OG BUND RAMME

TYPE	DESCRIPTION	MODULAR SIZE (W)	WEIGHT (kg)	ORDER No. RAL 9010 SMF.	ORDER No. RAL 7035 FTF.
TBPDB 3	FLAT TOP & BOTTOM PROFILES	300	0.21	65265	65285
TBPDB 4	FLAT TOP & BOTTOM PROFILES	400	0.30	65266	65286
TBPDB 5	FLAT TOP & BOTTOM PROFILES	500	0.40	65267	65287
TBPDB 6	FLAT TOP & BOTTOM PROFILES	600	0.51	65268	65288
TBPDB 8	FLAT TOP & BOTTOM PROFILES	800	0.68	65269	65289

25 mm FILLING PROFILES

25 mm FYLDER PROFIL

TYPE	DESCRIPTION	MODULAR SIZE (W)	WEIGHT (kg)	ORDER No. RAL 9010 SMF.	ORDER No. RAL 7035 FTF.
FLPDB 3	25 mm FILLING PROFILES	300	0.22	65291	65475
FLPDB 4	25 mm FILLING PROFILES	400	0.30	65292	65476
FLPDB 5	25 mm FILLING PROFILES	500	0.37	65293	65477
FLPDB 6	25 mm FILLING PROFILES	600	0.45	65294	65478
FLPDB 8	25 mm FILLING PROFILES	800	0.37	65295	65479

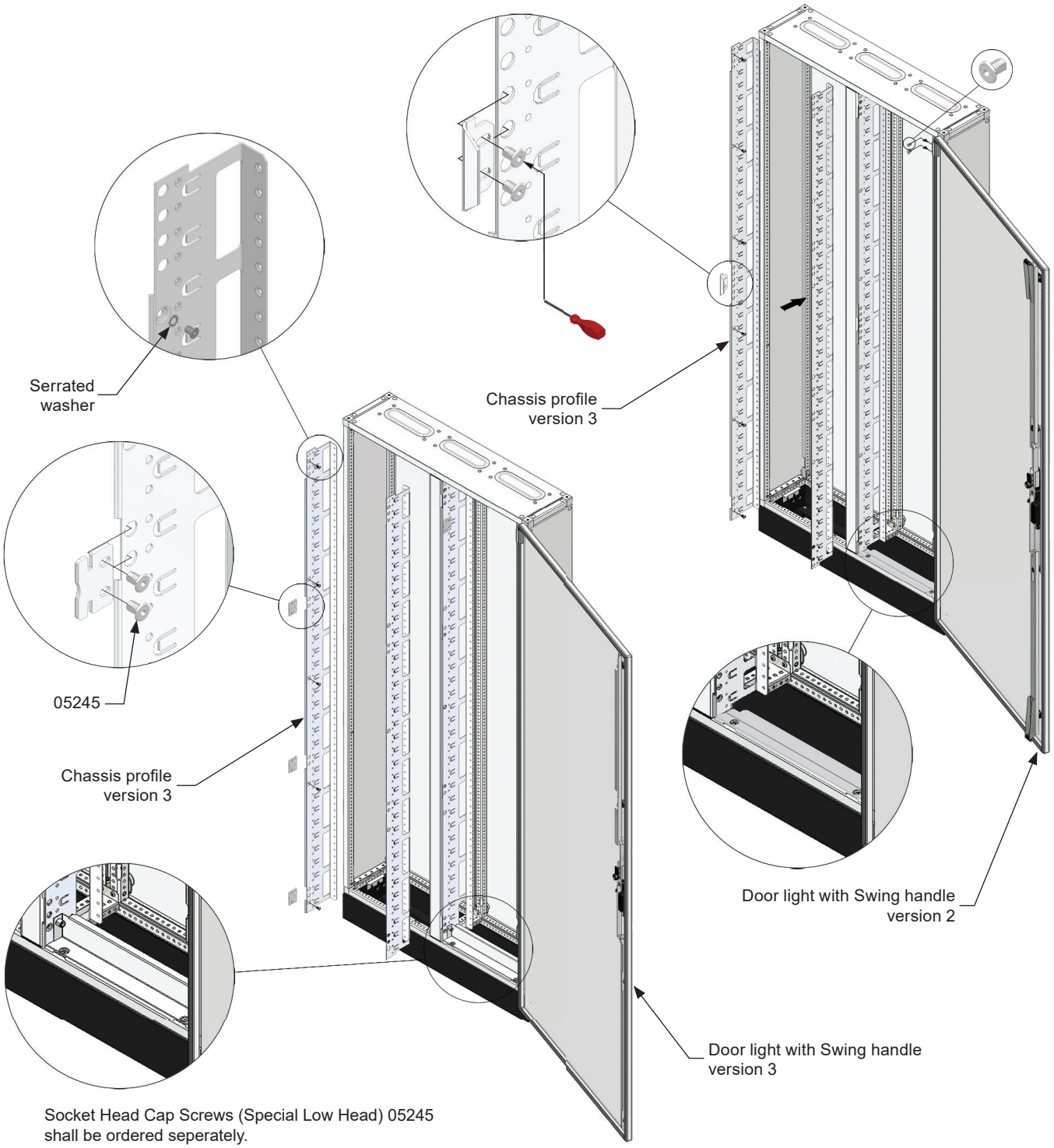

Socket Head Cap Screws (Special Low Head) 05245
shall be ordered seperately.

DIN INSERTS																
TYPE	300×150		400×150		500×150		600×150		300×200		400×200		500×200		600×200	
	ROWS	MODULES	ROWS	MODULES	ROWS	MODULES	ROWS	MODULES	ROWS	MODULES	ROWS	MODULES	ROWS	MODULES	ROWS	MODULES
CPDB 2	1	12	1	18	1	23	1	29	-	-	-	-	-	-	-	-
CPDB 4	2	24	2	36	2	46	2	58	1	12	1	18	1	23	1	29
CPDB 6	3	36	3	54	3	69	3	87	2	24	2	36	2	46	2	58
CPDB 8	5	60	5	90	5	115	5	145	3	36	3	54	3	69	3	87
CPDB 10	6	72	6	108	6	138	6	174	4	48	4	72	4	92	4	116
CPDB 12	7	84	7	126	7	161	7	203	5	60	5	90	5	115	5	145
CPDB 14	9	108	9	162	9	207	9	261	6	72	6	108	6	138	6	174
CPDB 16	10	120	10	180	10	230	10	290	7	84	7	126	7	161	7	203
CPDB 18	11	132	11	198	11	253	11	319	8	96	8	144	8	184	8	232
CPDB 20	13	156	13	234	13	299	13	377	9	108	9	162	9	207	9	261

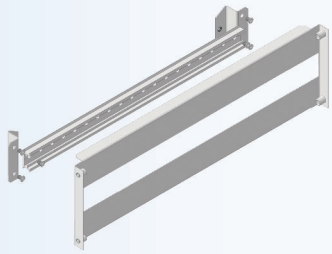

STEEL DIN RAIL INSERT
(FOR SMISSLINE TP BY ABB)

STÅL DIN INDSATS
(TIL SMISSLINE TP BY ABB)

TYPE	DESCRIPTION	ROWS × MODULES	SIZE (W×H)	WEIGHT (kg)	ORDER No. RAL 9010 SMF.	ORDER No. RAL 7035 FTF.
*SMDI 3.1-5	STEEL DIN RAIL INSERT	1 × 8	300 × 150	0.49	66549	66525
*SMDI 3.2	STEEL DIN RAIL INSERT	1 × 8	300 × 200	0.59	66550	66526
*SMDI 3.3	STEEL DIN RAIL INSERT	2 × 8	300 × 300	0.79	66551	66527
*SMDI 3.4-5	STEEL DIN RAIL INSERT	3 × 8	300 × 450	1.09	66552	66528
SMDI 4.1-5	STEEL DIN RAIL INSERT	1 × 12	400 × 150	0.63	66553	66529
SMDI 4.2	STEEL DIN RAIL INSERT	1 × 12	400 × 200	0.78	66554	66530
SMDI 4.3	STEEL DIN RAIL INSERT	2 × 12	400 × 300	1.04	66555	66531
SMDI 4.4-5	STEEL DIN RAIL INSERT	3 × 12	400 × 450	1.45	66556	66532
*SMDI 5.1-5	STEEL DIN RAIL INSERT	1 × 18	500 × 150	0.77	66557	66533
*SMDI 5.2	STEEL DIN RAIL INSERT	1 × 18	500 × 200	0.96	66558	66534
*SMDI 5.3	STEEL DIN RAIL INSERT	2 × 18	500 × 300	1.29	66559	66535
*SMDI 5.4-5	STEEL DIN RAIL INSERT	3 × 18	500 × 450	1.81	66560	66536
SMDI 6.1-5	STEEL DIN RAIL INSERT	1 × 24	600 × 150	0.91	66561	66537
SMDI 6.2	STEEL DIN RAIL INSERT	1 × 24	600 × 200	1.14	66562	66538
SMDI 6.3	STEEL DIN RAIL INSERT	2 × 24	600 × 300	1.54	66563	66539
SMDI 6.4-5	STEEL DIN RAIL INSERT	3 × 24	600 × 450	2.17	66564	66540
SMDI 8.1-5	STEEL DIN RAIL INSERT	1 × 34	800 × 150	1.19	66565	66541
SMDI 8.2	STEEL DIN RAIL INSERT	1 × 34	800 × 200	1.50	66566	66542
SMDI 8.3	STEEL DIN RAIL INSERT	2 × 34	800 × 300	2.04	66567	66543
SMDI 8.4-5	STEEL DIN RAIL INSERT	3 × 34	800 × 450	2.90	66568	66544
SMDI 10.1-5	STEEL DIN RAIL INSERT	1 × 46	1000 × 150	1.48	66569	66545
SMDI 10.2	STEEL DIN RAIL INSERT	1 × 46	1000 × 200	1.86	66570	66546
SMDI 10.3	STEEL DIN RAIL INSERT	2 × 46	1000 × 300	2.55	66571	66547
SMDI 10.4-5	STEEL DIN RAIL INSERT	3 × 46	1000 × 450	3.62	66572	66548

* Horizontal mounting only.

FILLING PROFILES
(FOR SMISSLINE TP BY ABB)

FYLDER PROFIL
(TIL SMISSLINE TP BY ABB)

TYPE	DESCRIPTION	SIZE (W)	WEIGHT (kg)	ORDER No. RAL 9010 SMF.	ORDER No. RAL 7035 FTF.
SMFP 4	FILLING PROFILE VERTICAL	400	0.30	66577	66573
SMFP 6	FILLING PROFILE VERTICAL	600	0.51	66578	66574
SMFP 8	FILLING PROFILE VERTICAL	800	0.68	66579	66575
SMFP 10	FILLING PROFILE VERTICAL	1000	0.79	66580	66576

HORIZONTAL ARRANGEMENT

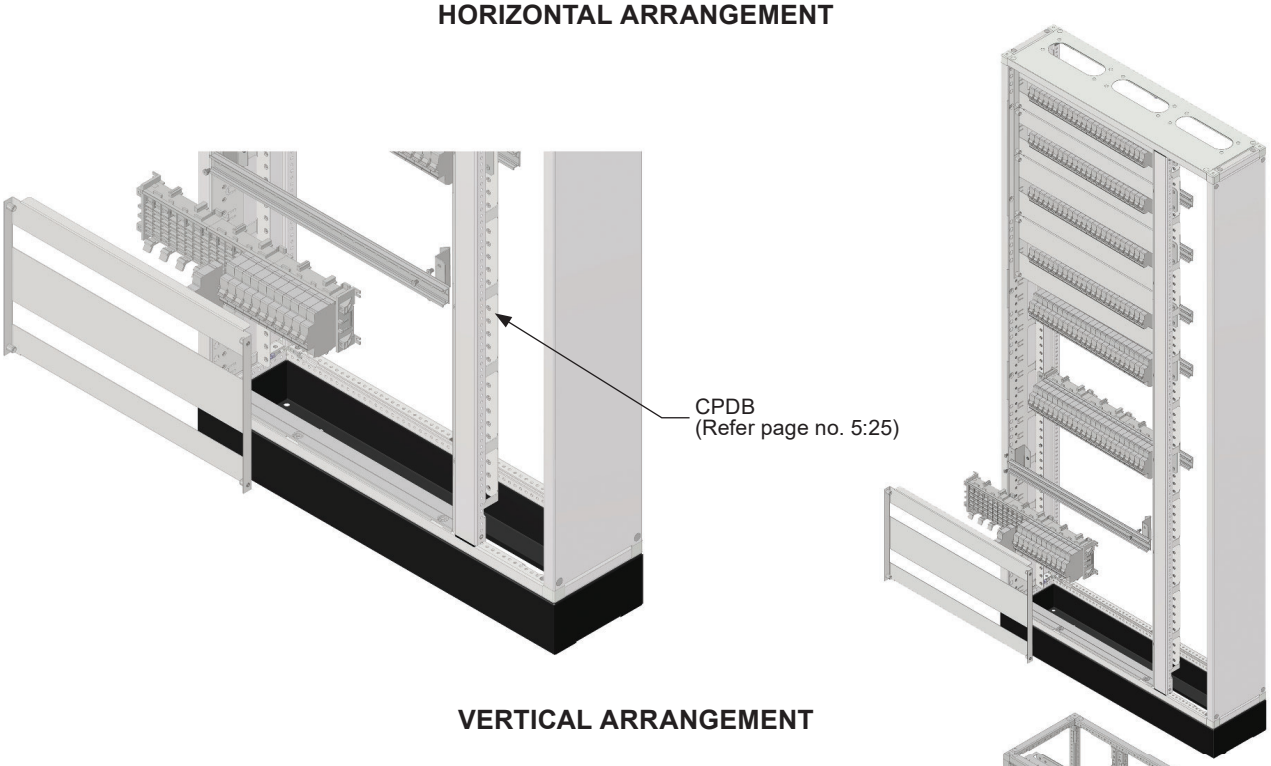

VERTICAL ARRANGEMENT

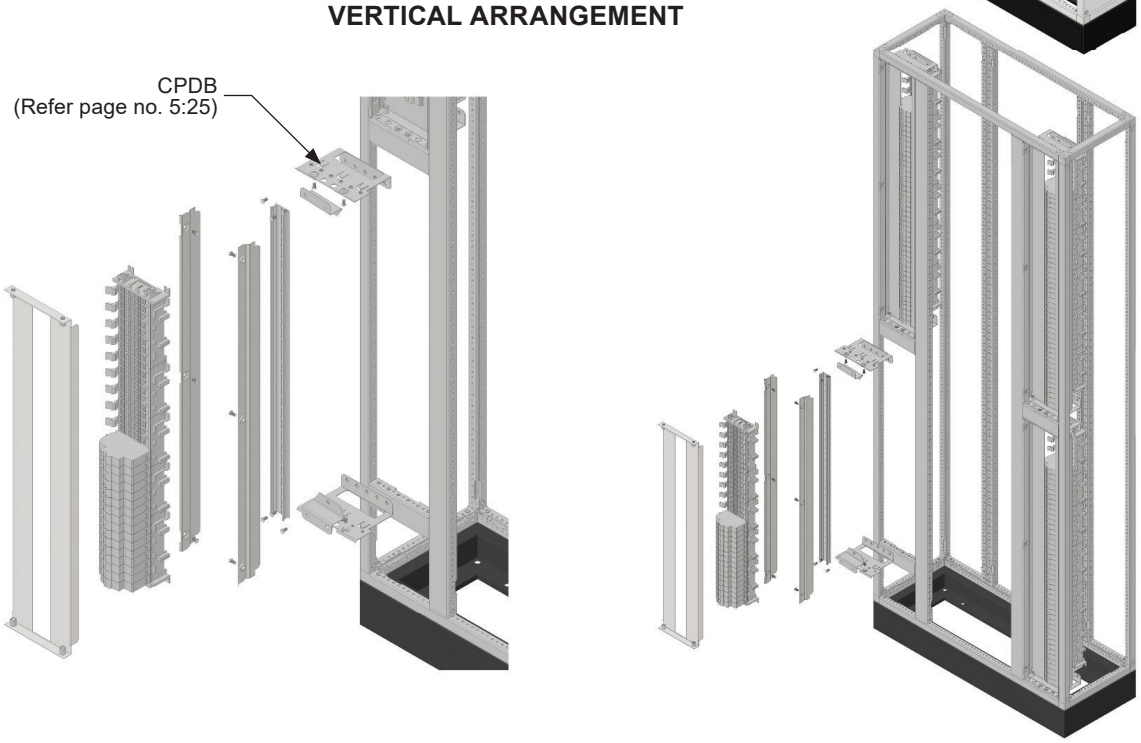

TYPE	SIZE (W)	MODULES PER ROW	6-MODULE SOCKET PER ROW	8-MODULE SOCKET PER ROW	BUSBAR LENGTH
SMDI 3.X	300	8	0	1	140
SMDI 4.X	400	12	2	0	212
SMDI 5.X	500	18	3	0	320
SMDI 6.X	600	24	0	3	428
SMDI 8.X	800	34	3	2	608
SMDI 10.X	1000	46	1	5	824

Note : 'X' is Height.

STEEL DIN RAIL INSERT (FOR CHASSIS PROFILE)

STÅL DIN INDSATS (TIL CHASSIS PROFIL)

DIDB 4.15

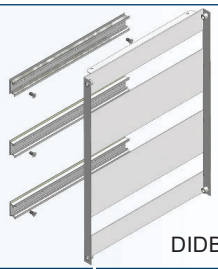

DIDB 4.45

TYPE	DESCRIPTION	ROWS+MODULES	SIZE (W×H)	WEIGHT (kg)	ORDER No. RAL 9010 SMF.	ORDER No. RAL 7035 FTF.
DIDB 3.1-5	STEEL DIN RAIL INSERT	1 × 12	300 × 150	0.40	65305	65306
DIDB 3.2	STEEL DIN RAIL INSERT	1 × 12	300 × 200	0.52	65315	65316
DIDB 3.3	STEEL DIN RAIL INSERT	2 × 12	300 × 300	0.78	65375	65376
DIDB 3.4-5	STEEL DIN RAIL INSERT	3 × 12	300 × 450	1.20	65450	65451
DIDB 4.1-5	STEEL DIN RAIL INSERT	1 × 18	400 × 150	0.51	65300	65301
DIDB 4.2	STEEL DIN RAIL INSERT	1 × 18	400 × 200	0.75	65310	65311
DIDB 4.3	STEEL DIN RAIL INSERT	2 × 18	400 × 300	1.04	65380	65381
DIDB 4.4-5	STEEL DIN RAIL INSERT	3 × 18	400 × 450	1.53	65455	65456
DIDB 5.1-5	STEEL DIN RAIL INSERT	1 × 23	500 × 150	0.67	65325	65326
DIDB 5.2	STEEL DIN RAIL INSERT	1 × 23	500 × 200	0.86	65335	65336
DIDB 5.3	STEEL DIN RAIL INSERT	2 × 23	500 × 300	1.30	65385	65386
DIDB 5.4-5	STEEL DIN RAIL INSERT	3 × 12	500 × 450	2.01	65460	65461
DIDB 6.1-5	STEEL DIN RAIL INSERT	1 × 29	600 × 150	0.83	65320	65321
DIDB 6.2	STEEL DIN RAIL INSERT	1 × 29	600 × 200	1.04	65330	65331
DIDB 6.3	STEEL DIN RAIL INSERT	2 × 29	600 × 300	1.56	65390	65391
DIDB 6.4-5	STEEL DIN RAIL INSERT	3 × 29	600 × 450	2.49	65465	65466
DIDB 8.1-5	STEEL DIN RAIL INSERT	1 × 40	800 × 150	0.99	65340	65341
DIDB 8.2	STEEL DIN RAIL INSERT	1 × 40	800 × 200	1.22	65345	65346
DIDB 8.3	STEEL DIN RAIL INSERT	2 × 40	800 × 300	1.82	65395	65396
DIDB 8.4-5	STEEL DIN RAIL INSERT	3 × 40	800 × 450	2.97	65397	65398

STEEL BLANK FRONT PLATE (FOR CHASSIS PROFILE)

AFDÆKNING (TIL CHASSIS PROFIL)

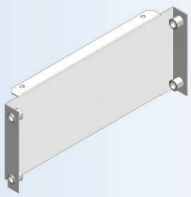

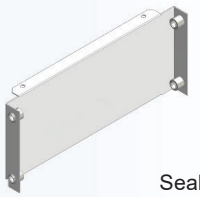

Seal type

TYPE	DESCRIPTION	SIZE (W×H)	WEIGHT (kg)	ORDER No. RAL 9010 SMF.	ORDER No. SEAL TYPE RAL 9010 SMF.	ORDER No. RAL 7035 FTF.	ORDER No. SEAL TYPE RAL7035 FTF.
BFDB 3.5	STEEL BLANK FRONT PLATE	300 × 50	0.13	65543	-	65549	-
BFDB 3.1	STEEL BLANK FRONT PLATE	300 × 100	0.26	65544	-	65551	-
BFDB 3.1-5	STEEL BLANK FRONT PLATE	300 × 150	0.39	65545	65547	65553	65554
BFDB 3.2	STEEL BLANK FRONT PLATE	300 × 200	0.52	65546	65548	65556	65558
BFDB 3.3	STEEL BLANK FRONT PLATE	300 × 300	0.83	65550	65552	65559	65561
BFDB 3.4-5	STEEL BLANK FRONT PLATE	300 × 450	1.17	65555	65557	65567	65568
BFDB 3.6	STEEL BLANK FRONT PLATE	300 × 600	1.56	65560	65562	65569	65571
BFDB 4.5	STEEL BLANK FRONT PLATE	400 × 50	0.19	65498	-	65508	-
BFDB 4.1	STEEL BLANK FRONT PLATE	400 × 100	0.37	65499	-	65509	-
BFDB 4.1-5	STEEL BLANK FRONT PLATE	400 × 150	0.56	65500	65502	65506	65511
BFDB 4.2	STEEL BLANK FRONT PLATE	400 × 200	0.69	65501	65503	65513	65514
BFDB 4.3	STEEL BLANK FRONT PLATE	400 × 300	1.02	65505	65507	65516	65522
BFDB 4.4-5	STEEL BLANK FRONT PLATE	400 × 450	1.53	65510	65512	65523	65524
BFDB 4.6	STEEL BLANK FRONT PLATE	400 × 600	2.05	65515	65517	65526	65527
BFDB 5.5	STEEL BLANK FRONT PLATE	500 × 50	0.23	65563	-	65572	-
BFDB 5.1	STEEL BLANK FRONT PLATE	500 × 100	0.46	65564	-	65573	-
BFDB 5.1-5	STEEL BLANK FRONT PLATE	500 × 150	0.69	65565	-	65574	-
BFDB 5.2	STEEL BLANK FRONT PLATE	500 × 200	0.86	65566	-	65576	-
BFDB 5.3	STEEL BLANK FRONT PLATE	500 × 300	1.28	65570	-	65577	-
BFDB 5.4-5	STEEL BLANK FRONT PLATE	500 × 450	2.08	65575	-	65578	-
BFDB 5.6	STEEL BLANK FRONT PLATE	500 × 600	2.78	65580	-	65581	-
BFDB 6.5	STEEL BLANK FRONT PLATE	600 × 50	0.25	65518	-	65528	-
BFDB 6.1	STEEL BLANK FRONT PLATE	600 × 100	0.51	65519	-	65529	-
BFDB 6.1-5	STEEL BLANK FRONT PLATE	600 × 150	0.76	65520	-	65531	-
BFDB 6.2	STEEL BLANK FRONT PLATE	600 × 200	1.03	65521	-	65532	-
BFDB 6.3	STEEL BLANK FRONT PLATE	600 × 300	1.56	65525	-	65533	-
BFDB 6.4-5	STEEL BLANK FRONT PLATE	600 × 450	2.29	65530	-	65534	-
BFDB 6.6	STEEL BLANK FRONT PLATE	600 × 600	3.06	65535	-	65536	-
BFDB 8.5	STEEL BLANK FRONT PLATE	800 × 50	0.25	65640	-	65641	-
BFDB 8.1	STEEL BLANK FRONT PLATE	800 × 100	0.51	65642	-	65643	-
BFDB 8.1-5	STEEL BLANK FRONT PLATE	800 × 150	0.76	65644	-	65645	-
BFDB 8.2	STEEL BLANK FRONT PLATE	800 × 200	1.03	65646	-	65647	-
BFDB 8.3	STEEL BLANK FRONT PLATE	800 × 300	1.54	65584	-	65585	-
BFDB 8.4-5	STEEL BLANK FRONT PLATE	800 × 450	2.29	65586	-	65587	-
BFDB 8.6	STEEL BLANK FRONT PLATE	800 × 600	3.04	65588	-	65589	-

Tip!
Mounting and wiring can be done on the work table.

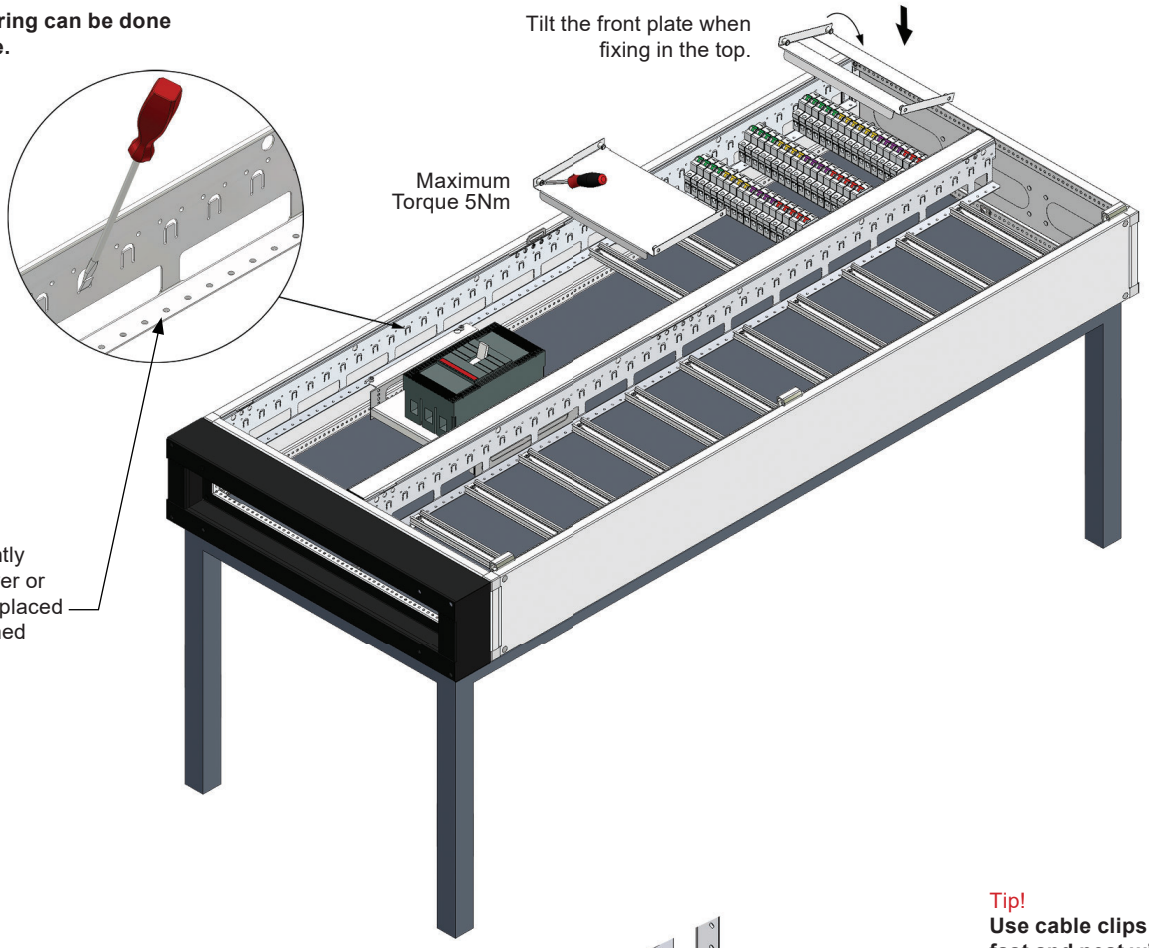

Tip!
Use cable clips for fast and neat wiring.

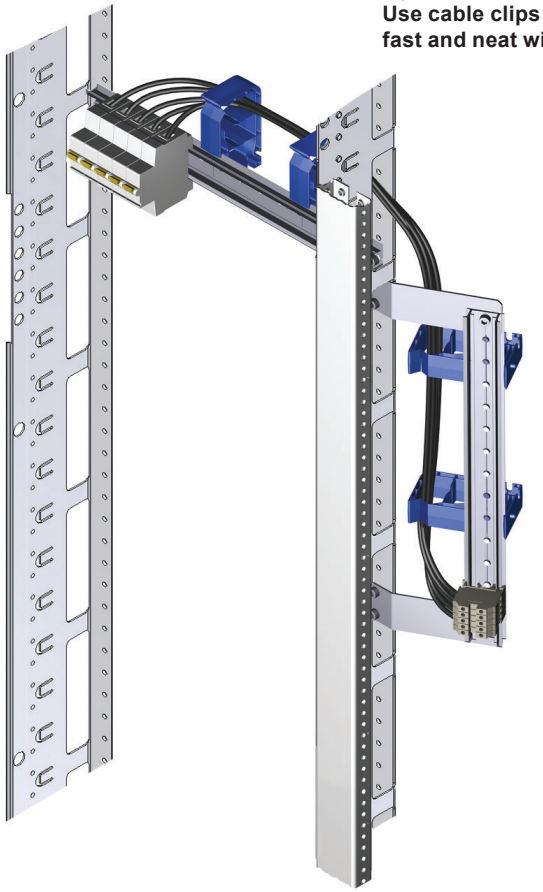

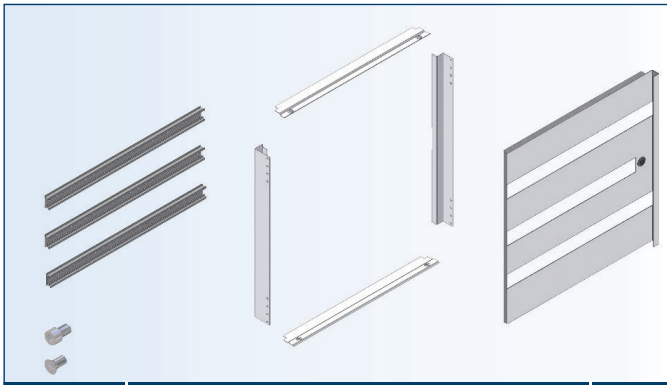

STEEL DIN RAIL INSERT WITH ESCUTCHEON DOOR (FOR CHASSIS PROFILE)

STÅL DIN INDSATS MED INVENDIG DØR (TIL CHASSIS PROFILE)

TYPE	DESCRIPTION	ROWS+MODULES	SIZE (W×H)	WEIGHT (kg)	ORDER No. RAL 9010 SMF	ORDER No. RAL 7035 FTF
SDRCP 4.2	STEEL DIN RAIL INSERT WITH ESCUTCHEON DOOR	1 × 13	400 × 200	1.85	30600	30601
SDRCP 4.4	STEEL DIN RAIL INSERT WITH ESCUTCHEON DOOR	2 × 13	400 × 400	3.30	30602	30603
SDRCP 4.6	STEEL DIN RAIL INSERT WITH ESCUTCHEON DOOR	3 × 13	400 × 600	4.88	30604	30605
SDRCP 4.8	STEEL DIN RAIL INSERT WITH ESCUTCHEON DOOR	5 × 13	400 × 800	5.45	30606	30607
SDRCP 4.10	STEEL DIN RAIL INSERT WITH ESCUTCHEON DOOR	6 × 13	400 × 1000	7.35	30608	30609
SDRCP 6.2	STEEL DIN RAIL INSERT WITH ESCUTCHEON DOOR	1 × 25	600 × 200	2.60	30620	30621
SDRCP 6.4	STEEL DIN RAIL INSERT WITH ESCUTCHEON DOOR	2 × 25	600 × 400	4.58	30622	30623
SDRCP 6.6	STEEL DIN RAIL INSERT WITH ESCUTCHEON DOOR	3 × 25	600 × 600	6.81	30624	30625
SDRCP 6.8	STEEL DIN RAIL INSERT WITH ESCUTCHEON DOOR	5 × 25	600 × 800	9.72	30626	30627
SDRCP 6.10	STEEL DIN RAIL INSERT WITH ESCUTCHEON DOOR	6 × 25	600 × 1000	10.87	30628	30629

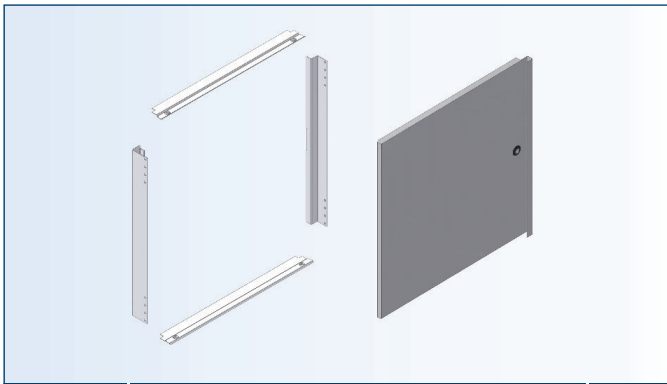

ESCUTCHEON DOOR (FOR CHASSIS PROFILE)

INVENDIG DØR (TIL CHASSIS PROFILE)

TYPE	DESCRIPTION	ROWS+MODULES	SIZE (W×H)	WEIGHT (kg)	ORDER No. RAL 9010 SMF	ORDER No. RAL 7035 FTF
ESDCP 4.2	ESCUTCHEON DOOR	1 × 18	400 × 200	1.87	16410	16411
ESDCP 4.4	ESCUTCHEON DOOR	2 × 18	400 × 400	3.24	16412	16413
ESDCP 4.6	ESCUTCHEON DOOR	4 × 18	400 × 600	4.60	16414	16415
ESDCP 4.8	ESCUTCHEON DOOR	6 × 18	400 × 800	5.97	16416	16417
ESDCP 4.10	ESCUTCHEON DOOR	7 × 18	400 × 1000	7.43	16418	16419
ESDCP 6.2	ESCUTCHEON DOOR	1 × 29	600 × 200	2.55	16430	16431
ESDCP 6.4	ESCUTCHEON DOOR	2 × 29	600 × 400	4.39	16432	16433
ESDCP 6.6	ESCUTCHEON DOOR	4 × 29	600 × 600	6.23	16434	16435
ESDCP 6.8	ESCUTCHEON DOOR	6 × 29	600 × 800	8.55	16436	16437
ESDCP 6.10	ESCUTCHEON DOOR	7 × 29	600 × 1000	9.90	16438	16439

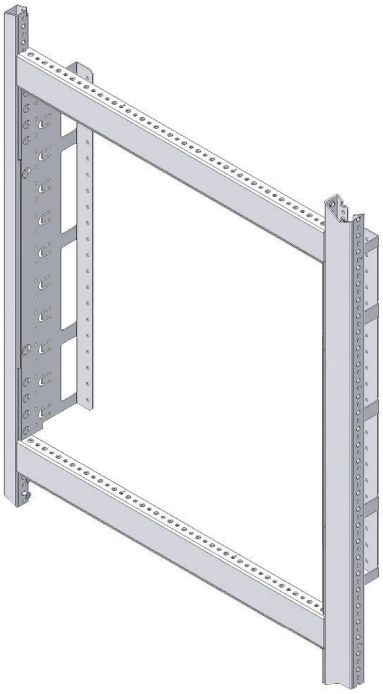

1

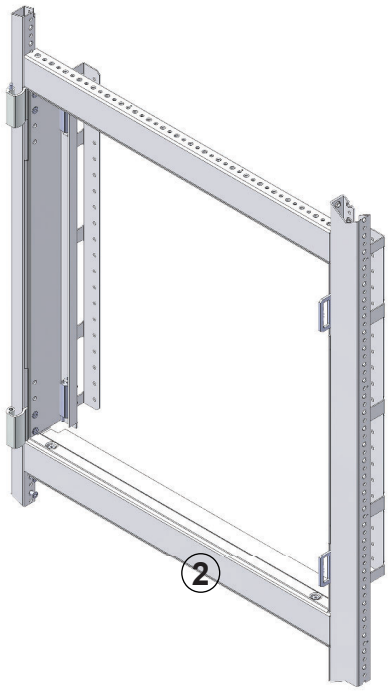

2

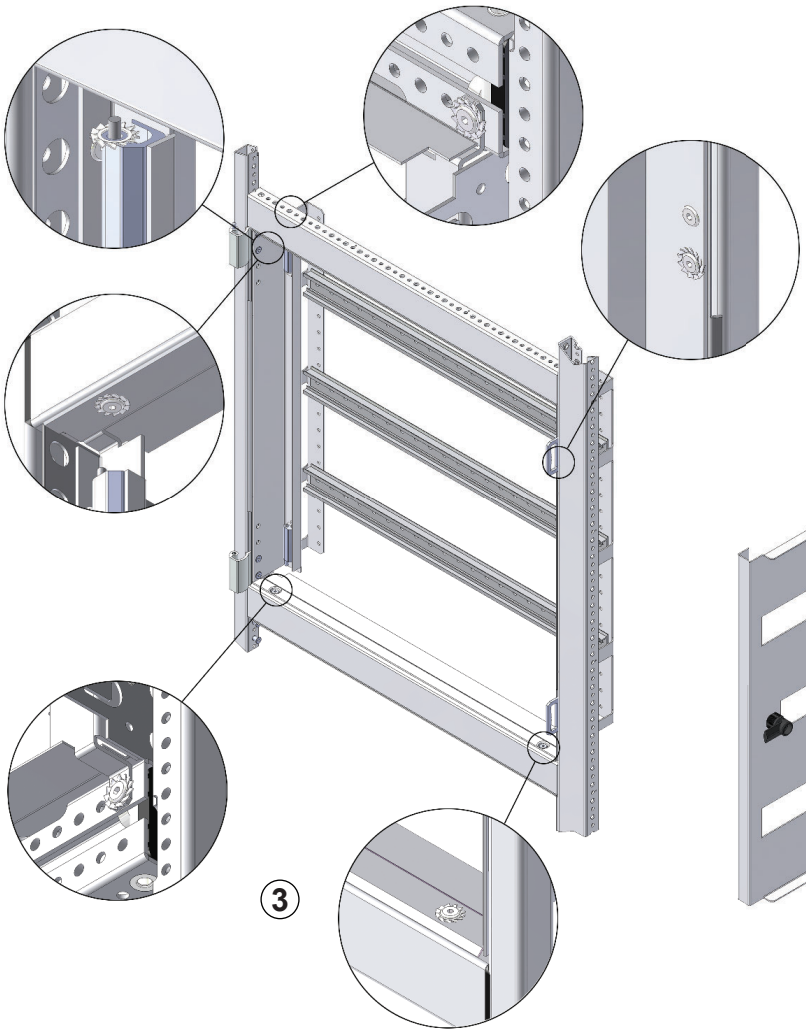

3

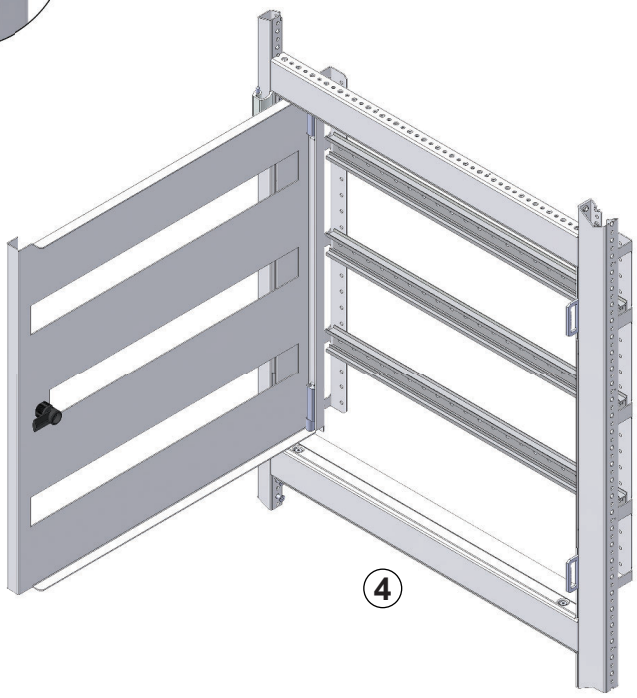

4

PE BRASS BAR
(FOR CHASSIS PROFILE)

PE SKINNE MED BESLAG
(TIL CHASSIS PROFIL)

TYPE	DESCRIPTION	LENGTH	MAX. CABLE SIZE (mm^2)	NO. OF CONNECTING POINTS	WEIGHT (kg)	ORDER No.
PBBCP 1.1	PE BRASS BAR - 6×9	300	10	21	0.19	66080
PBBCP 1.2	PE BRASS BAR - 6×9	400	10	34	0.23	66081
PBBCP 1.3	PE BRASS BAR - 6×9	500	10	46	0.27	66082
PBBCP 1.4	PE BRASS BAR - 6×9	600	10	59	0.30	66083
PBBCP 1.5	PE BRASS BAR - 6×9	800	10	84	0.38	66084
PBBCP 2.1	PE BRASS BAR - 8×10	300	16	19	0.24	66085
PBBCP 2.2	PE BRASS BAR - 8×10	400	16	30	0.30	66086
PBBCP 2.3	PE BRASS BAR - 8×10	500	16	41	0.36	66087
PBBCP 2.4	PE BRASS BAR - 8×10	600	16	52	0.42	66088
PBBCP 2.5	PE BRASS BAR - 8×10	800	16	74	0.53	66089
PBBCP 3.1	PE BRASS BAR - 8×12	300	25	17	0.26	66090
PBBCP 3.2	PE BRASS BAR - 8×12	400	25	27	0.33	66091
PBBCP 3.3	PE BRASS BAR - 8×12	500	25	37	0.39	66092
PBBCP 3.4	PE BRASS BAR - 8×12	600	25	47	0.46	66093
PBBCP 3.5	PE BRASS BAR - 8×12	800	25	67	0.59	66094

Brackets are included.

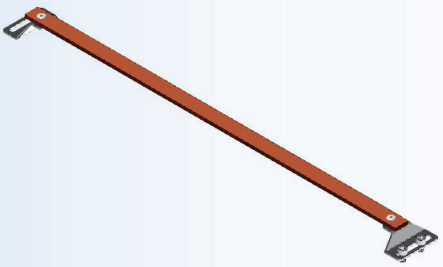

Cu Size 5×20

PE COPPER BAR
(FOR CHASSIS PROFILE)

PE SKINNE MED BESLAG
(TIL CHASSIS PROFIL)

TYPE	DESCRIPTION	LENGTH	WEIGHT (kg)	ORDER No.
PCBCP 1.1	PE COPPER BAR	300	0.19	66077
PCBCP 1.2	PE COPPER BAR	400	0.23	66078
PCBCP 1.3	PE COPPER BAR	500	0.27	66079

Brackets are included.

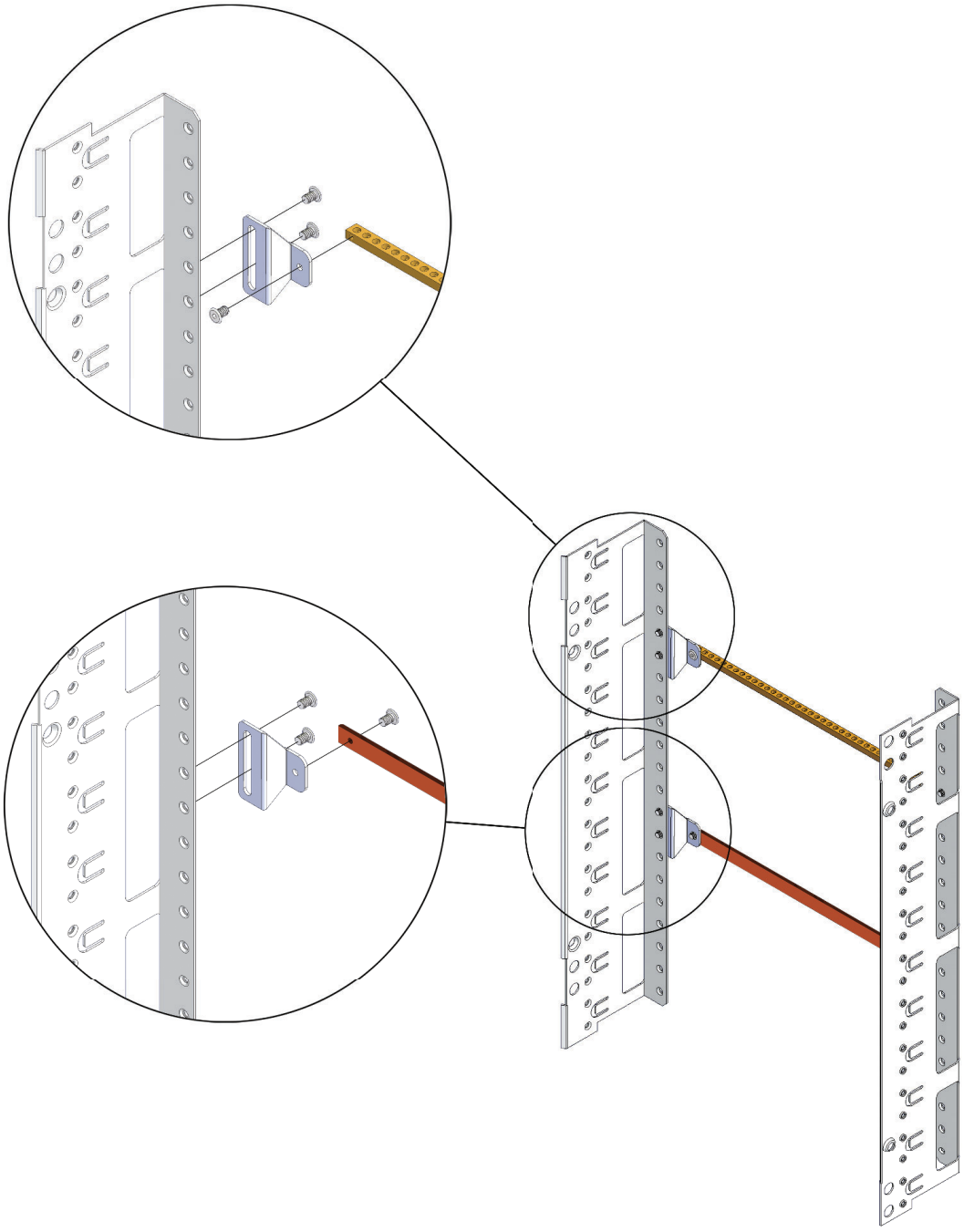

DIN RAIL
DIN SKINNE

TYPE	DESCRIPTION	LENGTH	WEIGHT (kg)	ORDER No. Aluminium
ALDR 2	DIN RAIL	2000	0.764	65350
ALDR 4	DIN RAIL	4000	1.530	65351

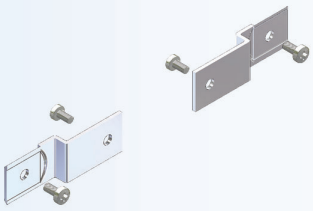

BRACKETS (FOR DIN RAIL)
BESLAG (TIL DIN SKINNE)

TYPE	DESCRIPTION	WEIGHT (kg)	ORDER No. Zinc plated
BDR	BRACKETS FOR DIN RAIL	0.06	65591

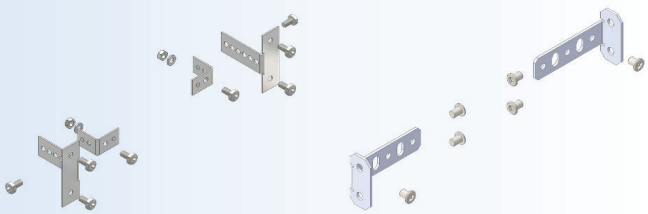

ADJUSTABLE BRACKETS (FOR DIN RAIL)
JUSTERBARE DIN (TIL DIN SKINNEBESLAG)

TYPE	DESCRIPTION	WEIGHT (kg)	ORDER No. Zinc plated
ABDR	ADJUSTABLE BRACKETS	0.14	65592

DBDR

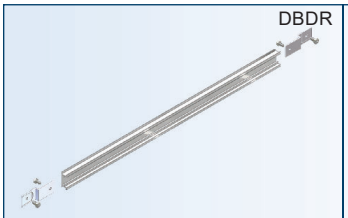

DBDRA

DIN RAIL WITH BRACKETS
HEL DIN SKINNE MED BESLAG

TYPE	DESCRIPTION	WEIGHT (kg)	ORDER No.
DBDR 6	DIN RAIL WITH BRACKETS	0.22	65594
DBDR 8	DIN RAIL WITH BRACKETS	0.35	65597
DBDRA 6	DIN RAIL WITH BRACKETS ASSEMBLED	0.22	65590
DBDRA 8	DIN RAIL WITH BRACKETS ASSEMBLED	0.35	69599

DABDR

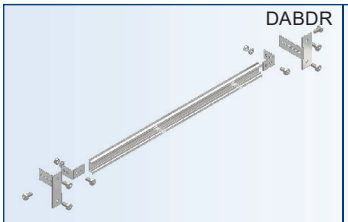

DABDRA

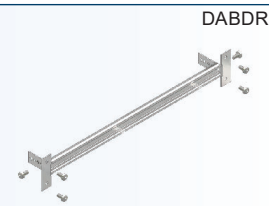

DIN RAIL WITH ADJUSTABLE BRACKETS
DIN SKINNE MED JUSTERBARE BESLAG

TYPE	DESCRIPTION	WEIGHT (kg)	ORDER No.
DABDR 6	DIN RAIL WITH ADJUSTABLE BRACKETS	0.31	65595
DABDR 8	DIN RAIL WITH ADJUSTABLE BRACKETS	0.53	65598
DABDRA 6	DIN RAIL WITH ADJUSTABLE BRACKETS ASSEMBLED	0.31	65648
DABDRA 8	DIN RAIL WITH ADJUSTABLE BRACKETS ASSEMBLED	0.53	65649

Instruction for depth adjustable DIN Rail

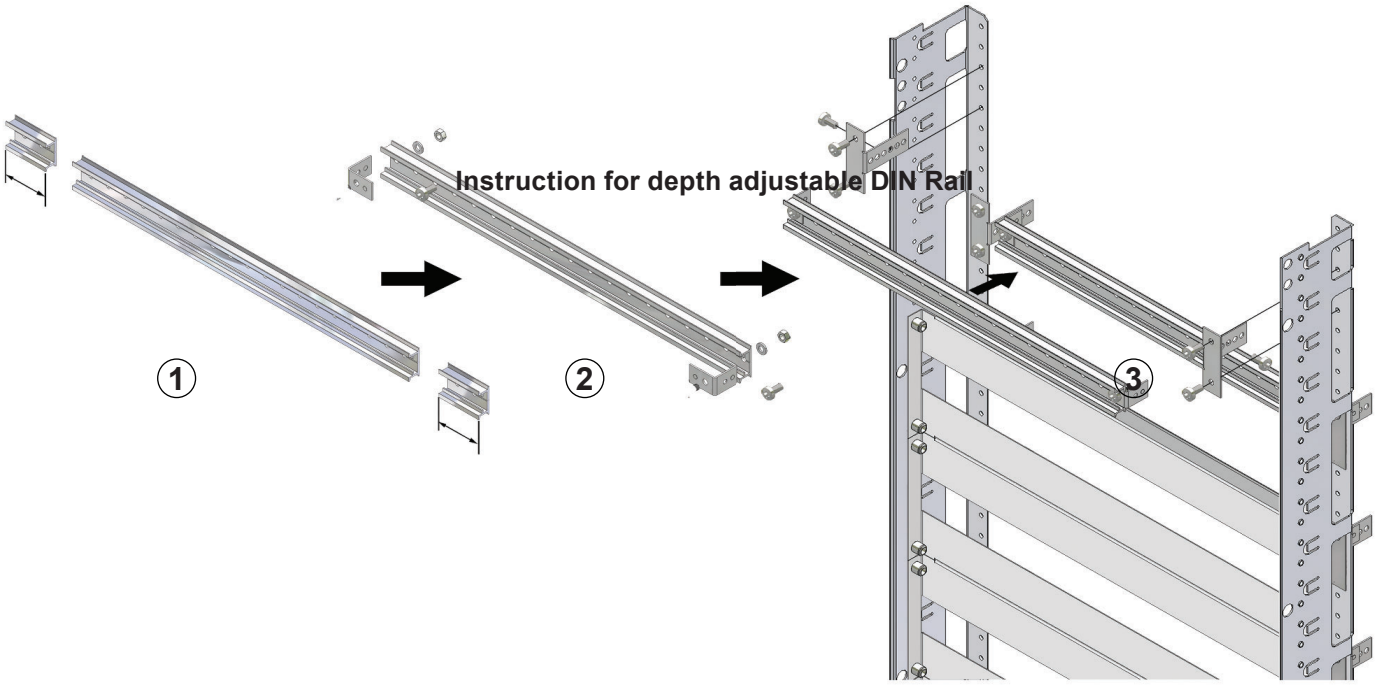

30

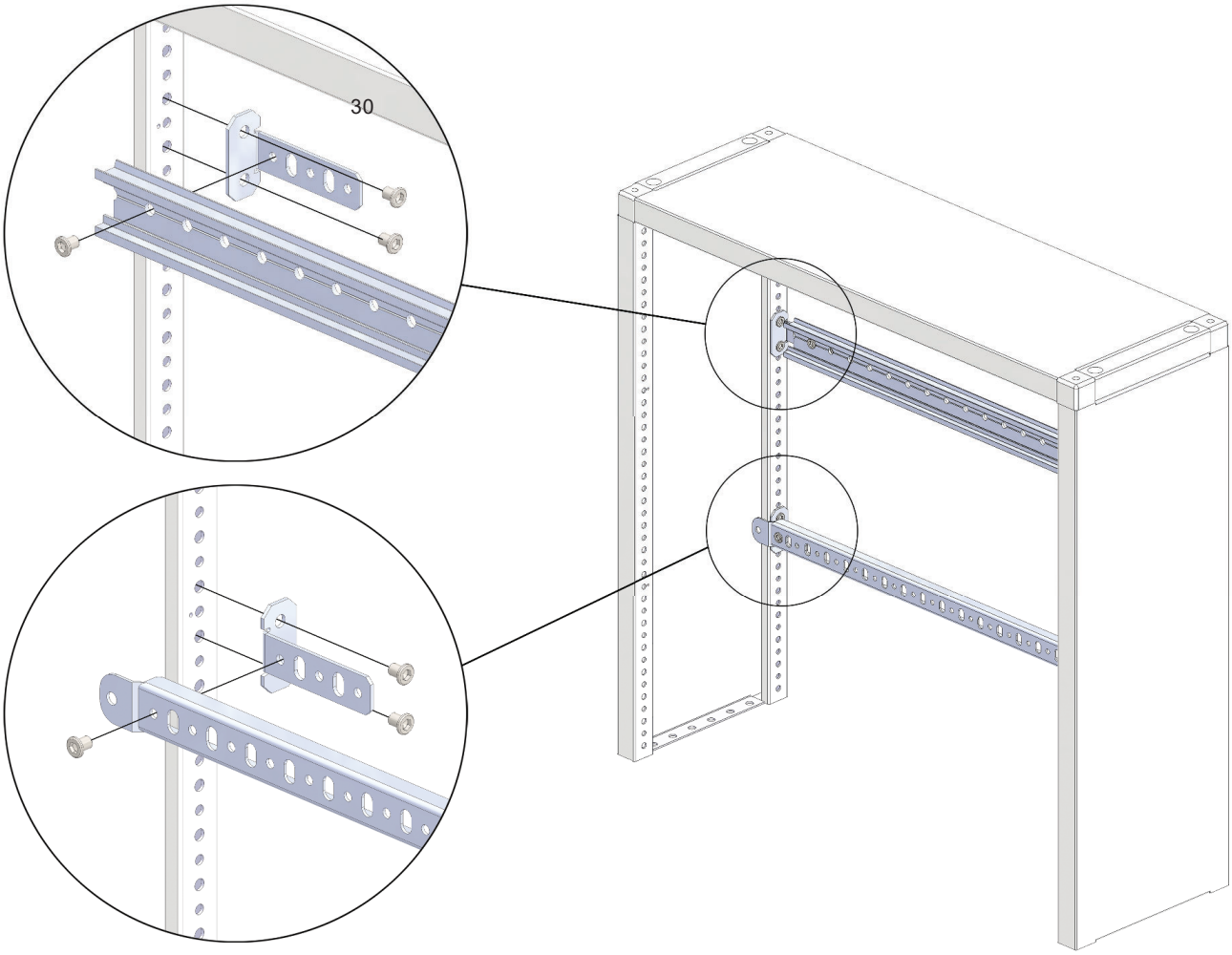

40mm wide cable trays with front access!

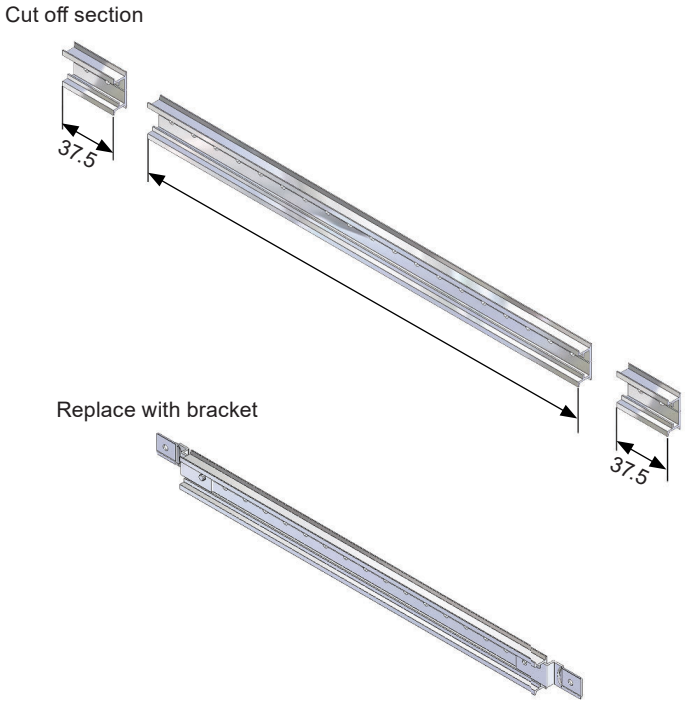

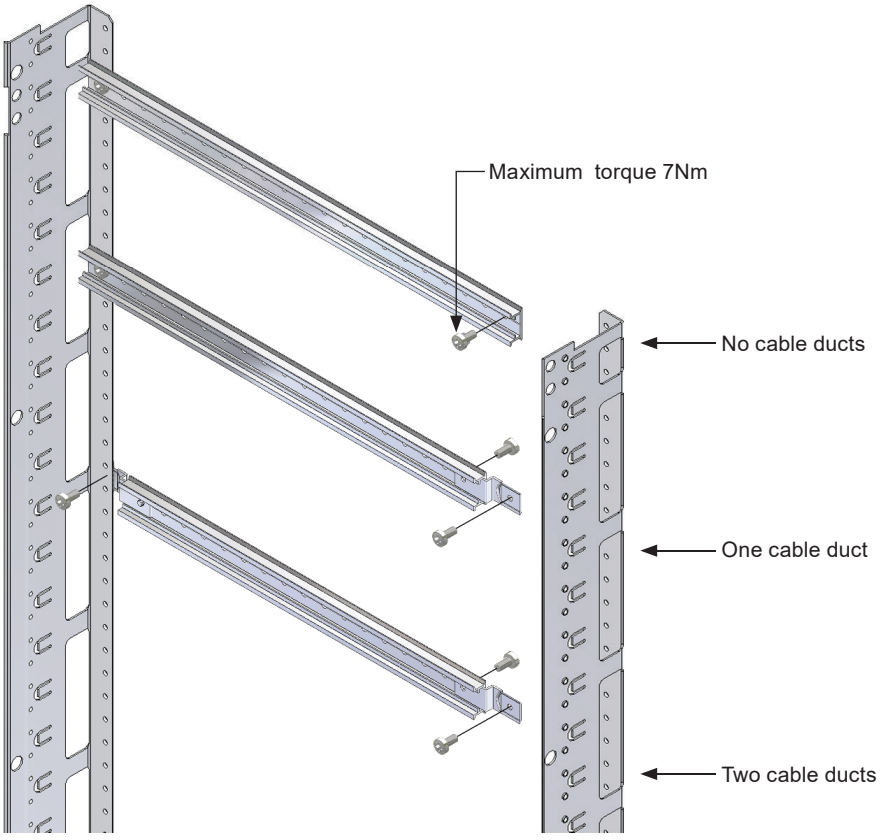

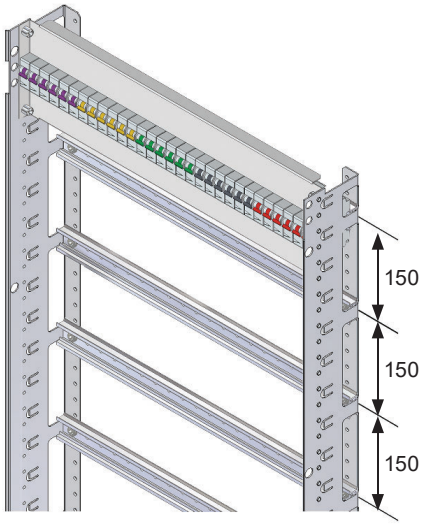

Compact - 150mm between DIN rails.
All cables laid with cable ties.

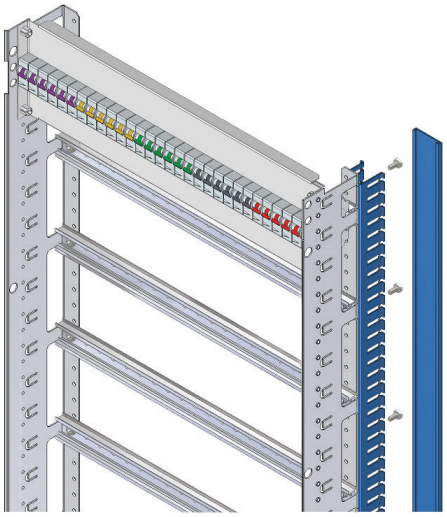

Compact - all cables laid in
cable ducts on the rear.

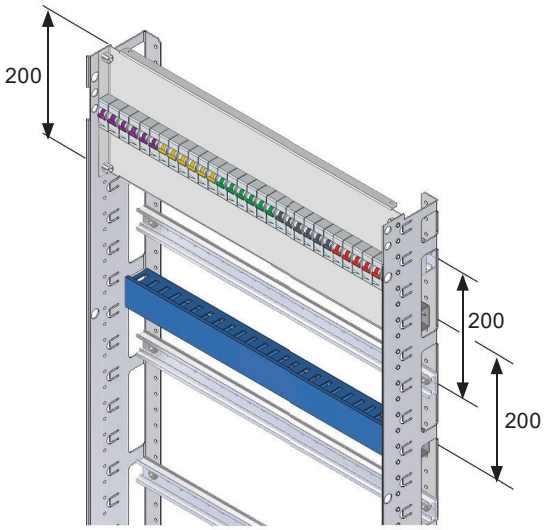

Cable duct - between DIN rails.

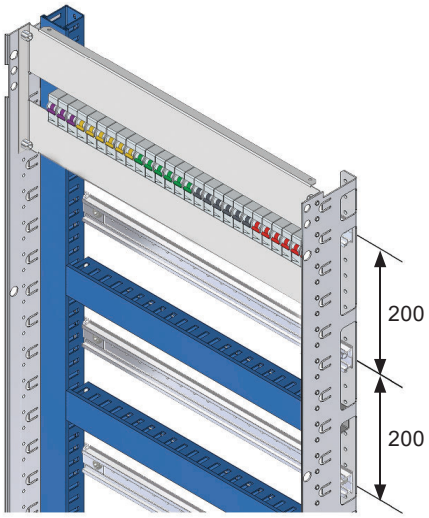

Wide space - 200mm between DIN rails.
Front access to cable ducts
1 vertical cable duct.

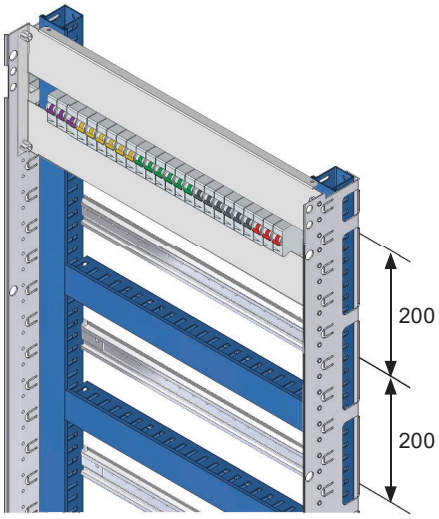

Wide space - 200mm between DIN rails.
Front access to cable ducts
2 vertical cable ducts.

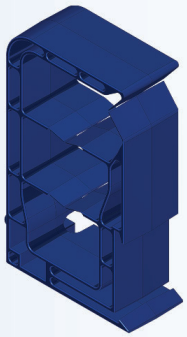

CABLE CLIP

KABEL HOLDER

TYPE	DESCRIPTION	WEIGHT (kg)	ORDER No.
CCP	CABLE CLIP	0.31	14370

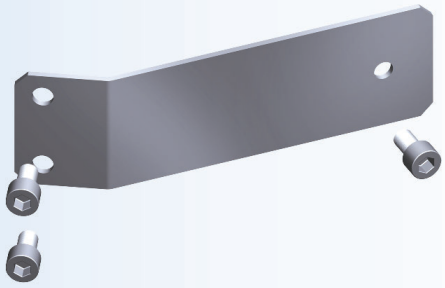

DIN RAIL HOLDER

DIN SKINNE HOLDER

TYPE	DESCRIPTION	WEIGHT (kg)	ORDER No.
DRHD	DIN RAIL HOLDER	0.88	65593

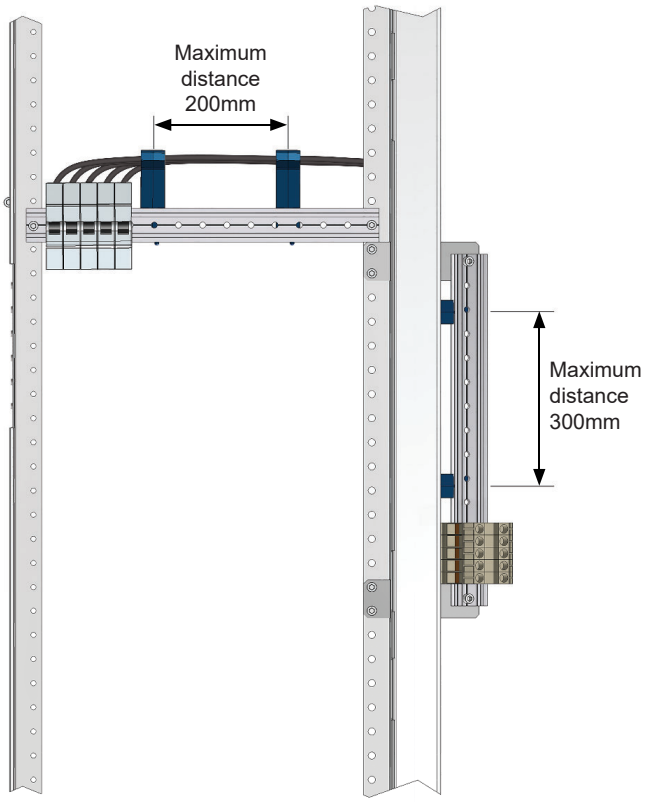

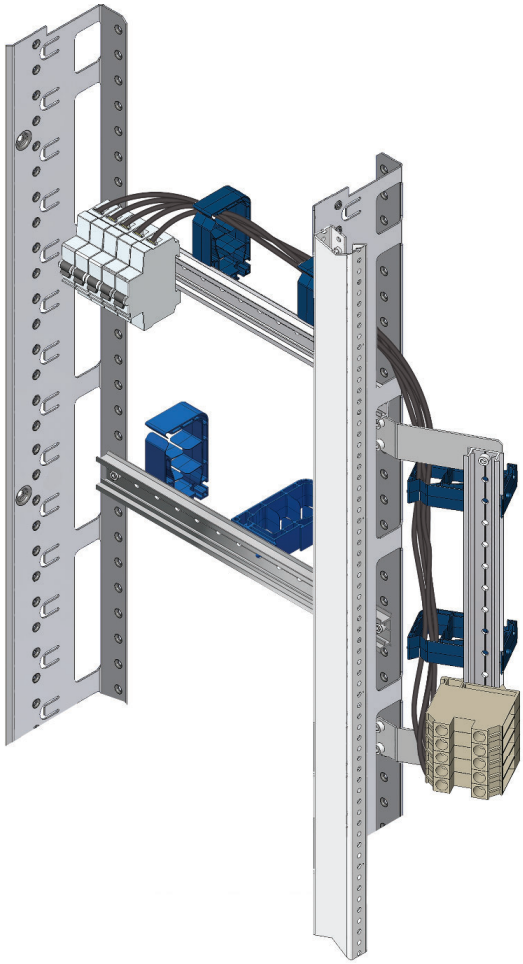

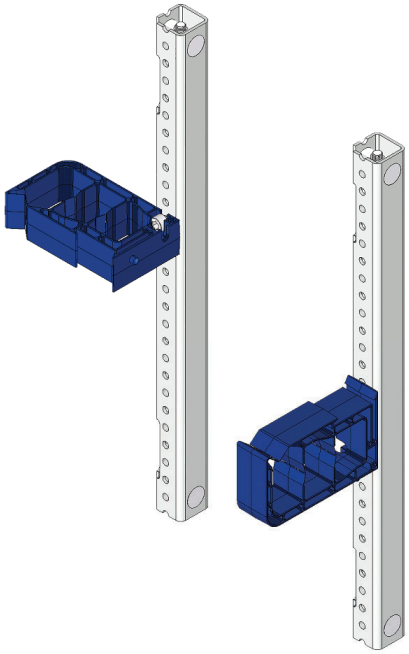

Tip!
You can separate incoming - outgoing and bus in 3 different compartments.

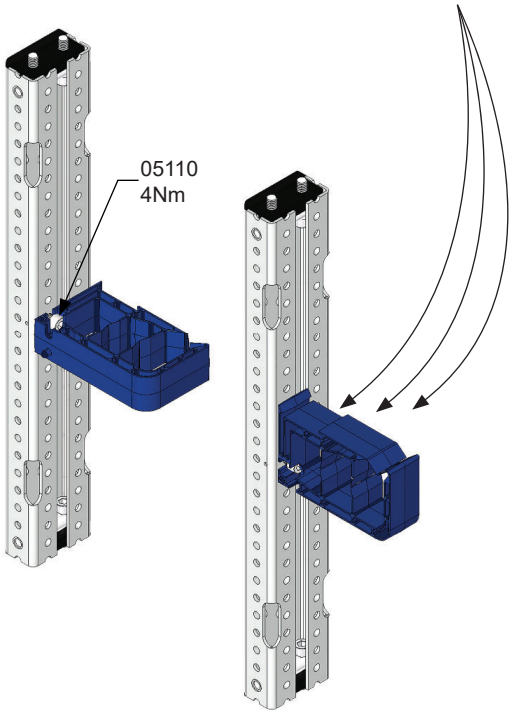

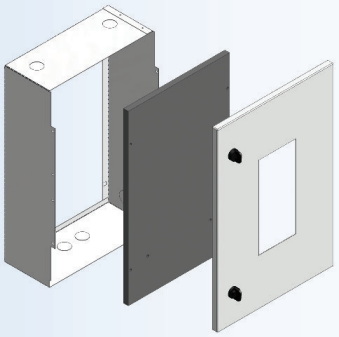

DANISH STANDARD METER COMPARTMENT

DANSK STANDARD MÅLER FELT

x 03

TYPE	DESCRIPTION	SIZE (W×H×D)	WEIGHT (kg)	VERSION 3 ORDER No. RAL 7035 FTF.
DSMC 4	DANISH STANDARD METER COMPARTMENT	400×600×200	6.74	31117
DSMC 6	DANISH STANDARD METER COMPARTMENT	600×600×200	9.81	31127

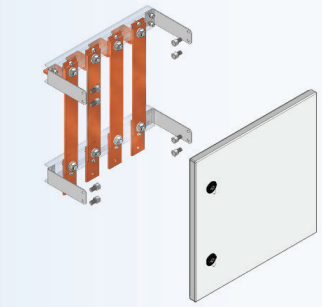

CT INSERT

STRØMMÅLER INDSATS

CURRENT TRANSFORMER INSERT

TYPE	DESCRIPTION	RATED CURRENT	Cu SIZE	SIZE (W×H)	WEIGHT (kg)	VERSION 3 ORDER No. RAL 7035 FTF.
CTIN 4	CT INSERT	400	5×40	400×400	6.97	31157
CTIN 8	CT INSERT	800	10×40	400×400	11.77	31167
CTIN 12,5	CT INSERT	1250	10×50	600×400	13.79	31197

DOOR SEAL SYSTEM

PLOMBERINGSSÆT

TYPE	DESCRIPTION	WEIGHT (kg)	VERSION 3 ORDER No. Steel Black
DSES	DOOR SEAL SYSTEM	0.1	30859

POLYCARBONATE SEPARATION PLATE

POLYCARBONAT SEPERATIONSPLADE

2mm

TYPE	DESCRIPTION	SIZE (W×H)	WEIGHT (kg)	ORDER No.
PSP 2.18	POLYCARBONATE SEPARATION PLATE	200 × 1800	0.67	16924
PSP 2.20	POLYCARBONATE SEPARATION PLATE	200 × 2000	0.75	16927
PSP 3.18	POLYCARBONATE SEPARATION PLATE	300 × 1800	1.08	16884
PSP 3.20	POLYCARBONATE SEPARATION PLATE	300 × 2000	1.20	16887

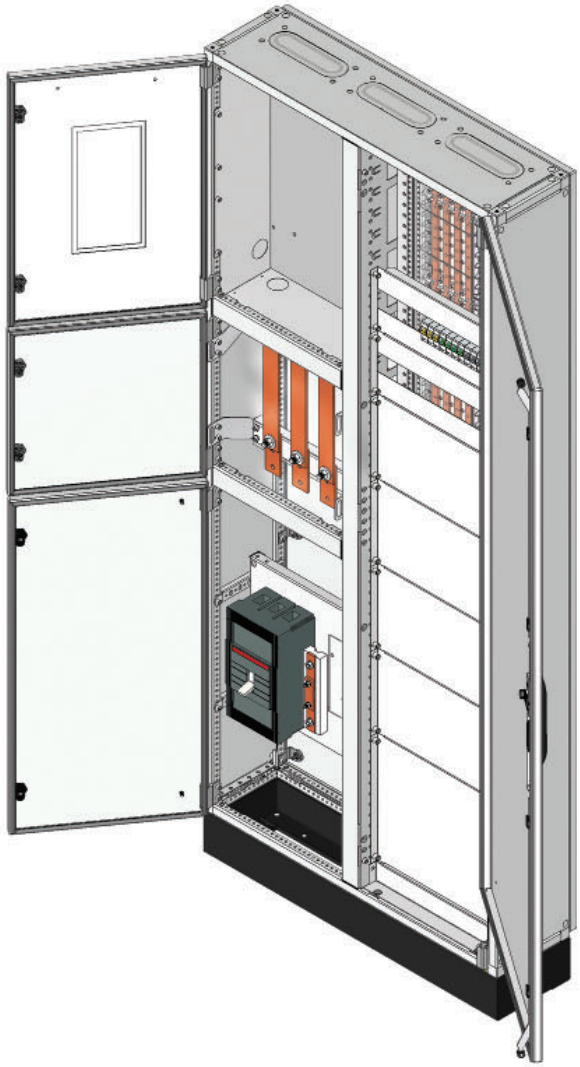

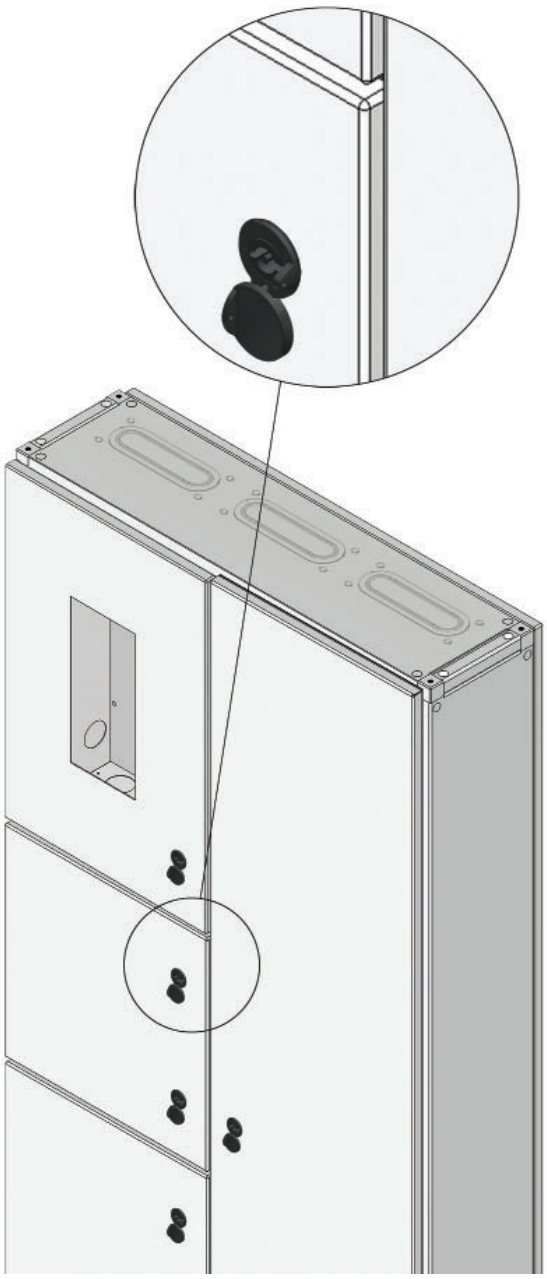

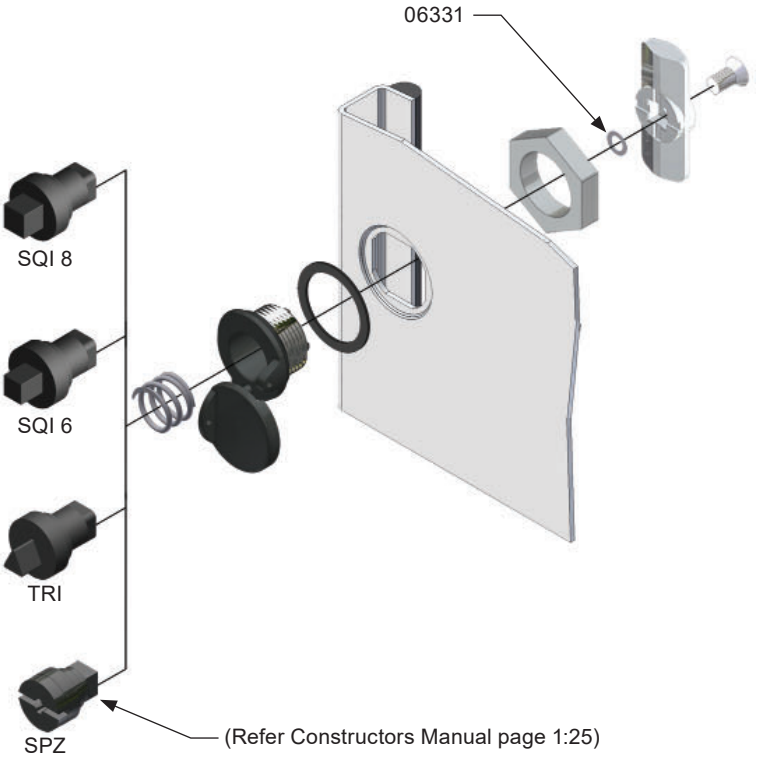
06331
SQI 8
SQI 6
TRI
SPZ
(Refer Constructors Manual page 1:25)

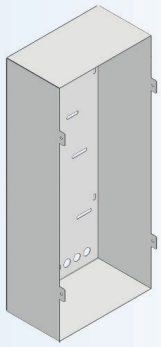

NORWEGIAN STANDARD METER COMPARTMENT

NORSK STANDARD MÅLER FELT

TYPE	DESCRIPTION	SIZE (W×H×D)	QUANTITY OF METERS	WEIGHT (kg)	ORDER No. RAL 9010 SMF.	ORDER No. RAL 7035 SMF.
MCFO 3.6.2	NORWEGIAN STANDARD METER COMPAR.	300 × 600 × 200	1	2.80	65671	66030
MCFO 3.10.2	NORWEGIAN STANDARD METER COMPAR.	300 × 1000 × 200	2	4.40	65672	66031
MCFO 3.12.2	NORWEGIAN STANDARD METER COMPAR.	300 × 1200 × 200	3	5.19	65673	66032
MCFO 3.14.2	NORWEGIAN STANDARD METER COMPAR.	300 × 1400 × 200	3	6.02	65674	66033
MCFO 4.4.2	NORWEGIAN STANDARD METER COMPAR.	400 × 400 × 200	1	2.45	65663	66034
MCFO 4.6.2	NORWEGIAN STANDARD METER COMPAR.	400 × 600 × 200	1	3.45	65664	66035
MCFO 4.8.2	NORWEGIAN STANDARD METER COMPAR.	400 × 800 × 200	2	4.39	65691	66036
MCFO 4.10.2	NORWEGIAN STANDARD METER COMPAR.	400 × 1000 × 200	2	5.36	65692	66037
MCFO 4.12.2	NORWEGIAN STANDARD METER COMPAR.	400 × 1200 × 200	3	6.31	65693	66038
MCFO 6.4.2	NORWEGIAN STANDARD METER COMPAR.	600 × 400 × 200	2	3.39	65694	66039
MCFO 6.6.2	NORWEGIAN STANDARD METER COMPAR.	600 × 600 × 200	2	4.69	65695	66040
MCFO 6.8.2	NORWEGIAN STANDARD METER COMPAR.	600 × 800 × 200	4	5.89	65696	66041
MCFO 6.10.2	NORWEGIAN STANDARD METER COMPAR.	600 × 1000 × 200	4	7.17	65697	66042
MCFO 6.12.2	NORWEGIAN STANDARD METER COMPAR.	600 × 1200 × 200	6	8.38	65698	66043
MCFO 6.14.2	NORWEGIAN STANDARD METER COMPAR.	600 × 1400 × 200	6	9.67	65699	66044
MCFO 8.6.2	NORWEGIAN STANDARD METER COMPAR.	800 × 600 × 200	3	5.93	65682	66045
MCFO 8.10.2	NORWEGIAN STANDARD METER COMPAR.	800 × 1000 × 200	6	8.98	65683	66046
MCFO 8.12.2	NORWEGIAN STANDARD METER COMPAR.	800 × 1200 × 200	9	12.51	65684	66047
MCFO 8.14.2	NORWEGIAN STANDARD METER COMPAR.	800 × 1400 × 200	9	14.42	65685	66048

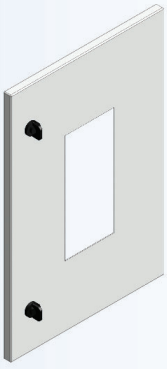

DOOR (FOR NORWEGIAN STANDARD METER COMPARTMENT)

DØR (TIL NORSK STANDARD MÅLER FELT)

TYPE	DESCRIPTION	SIZE (W×H)	WEIGHT (kg)	VERSION 3 ORDER No. RAL 7035 FTF.
DMCF 3.6	DOOR	300×600	1.50	65707
DMCF 6.6	DOOR	600×600	3.52	65717

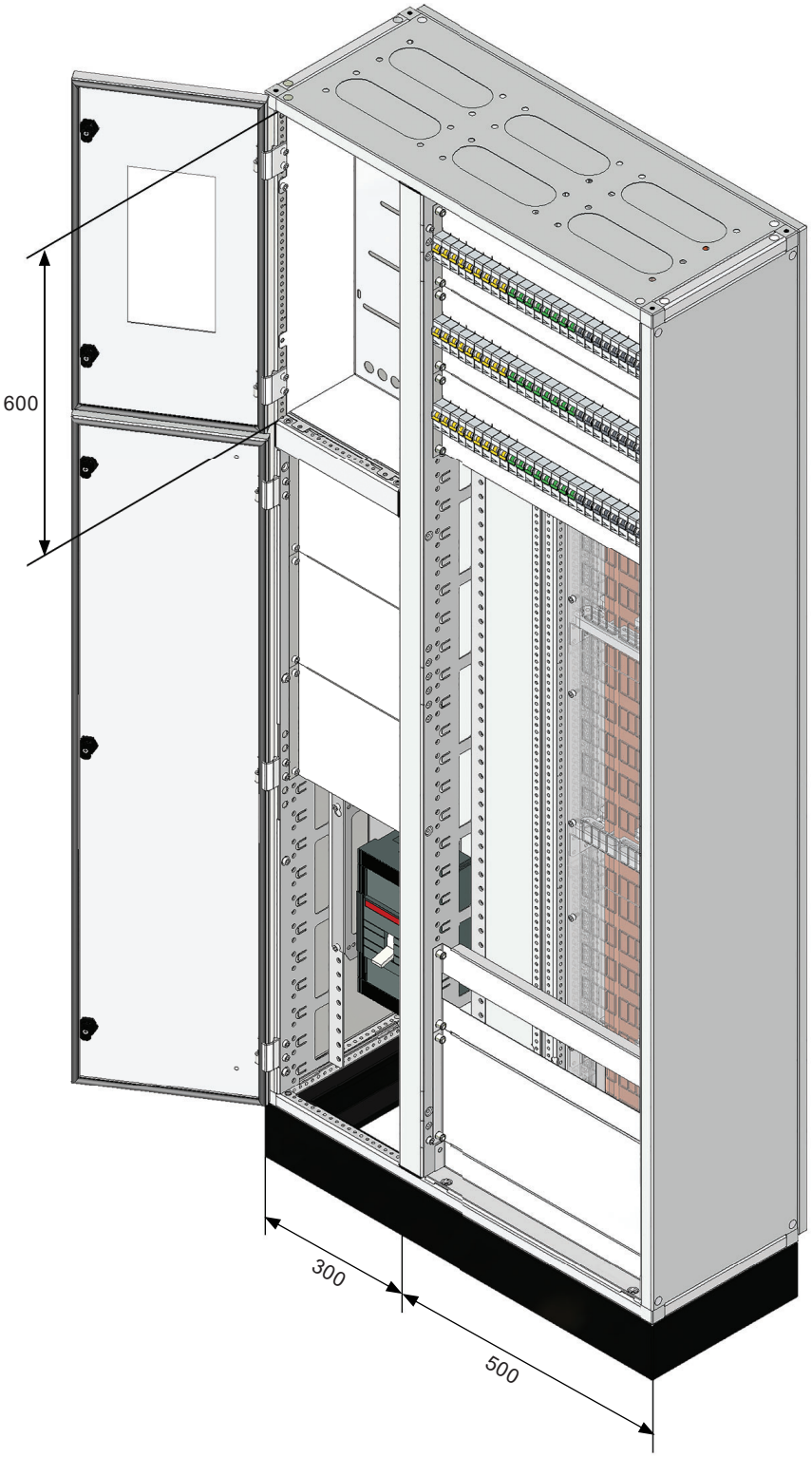
600
300
500

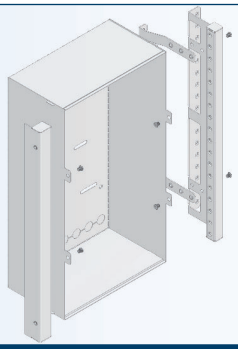

NORWEGIAN STANDARD METER COMPARTMENT (FOR CHASSIS PROFILE)

NORSK STANDARD MÅLER FELT (TIL CHASSIS PROFIL)

TYPE	DESCRIPTION	SIZE (W×H×D)	WEIGHT (kg)	ORDER No. RAL 7035 FTF.
MCNS 3.4-5.2	NORWEGIAN STANDARD METER COMPARTMENT	300×450×200	3.45	65756

MOUNTING PLATE (FOR NORWEGIAN STANDARD METER COMPARTMENT)

MONTAGE PLADE (TIL NORSK STANDARD MÅLER FELT)

TYPE	DESCRIPTION	SIZE (W×H)	WEIGHT (kg)	ORDER No. RAL 7035 FTF.
MPNMC 3.4-5	MOUNTING PLATE	300×450	0.95	65757

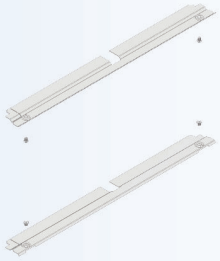

FILLER PROFILES (FOR NORWEGIAN STANDARD METER COMPARTMENT)

AFDÆKNING PROFIL (TIL NORSK STANDARD MÅLER FELT)

TYPE	DESCRIPTION	SIZE (W)	WEIGHT (kg)	ORDER No. RAL 7035 FTF.
FPNMC 6	FILLER PROFILES	600	0.49	65758
FPNMC 8	FILLER PROFILES	800	0.67	65759

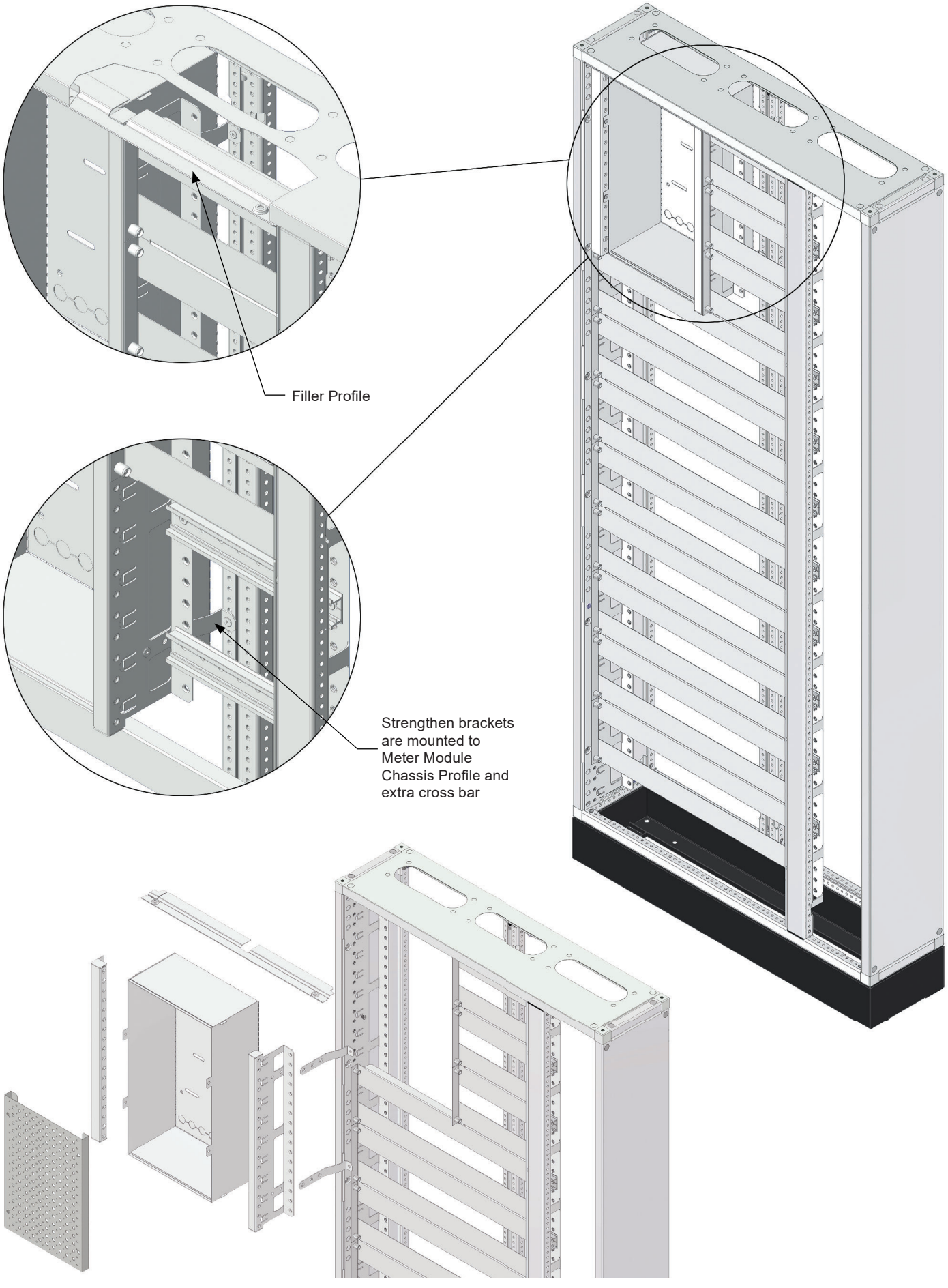
Filler Profile
Strengthen brackets are mounted to Meter Module Chassis Profile and extra cross bar

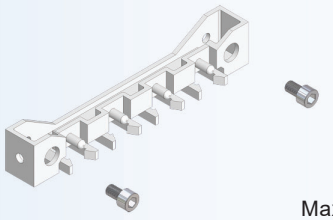

BUSBAR HOLDER
SKINNE HOLDER

Max. 16kA/0.5 Sec

TYPE	DESCRIPTION	SIZE	MAX. Cu SIZE	MAX. QTY. CONDUCTORS PER PHASE	PHASE CENTERS	WEIGHT (kg)	ORDER No.
BAH	BUSBAR HOLDER	25×25×150	5×15	1	30	0.03	20300

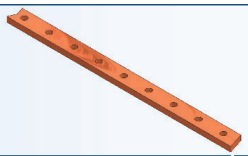

Cu BUSBAR 250A
Cu SKINNER 250A

TYPE	DESCRIPTION	SIZE (H×W×L)	CROSS SECTIONAL AREA (Sqr mm)	LENGTH	WEIGHT (kg)	ORDER No.
BSB	Cu BUSBAR 250A	5×15×4000	75	4000	2.89	20330

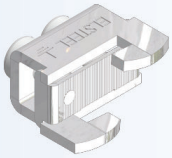

MAX. 70°

x10 Nos

BUSBAR CLAMP (FOR 5×15 Cu)
KLEMME (FOR Cu SKINNE)

TYPE	DESCRIPTION	WEIGHT (kg)	ORDER No.
BBCL15	BUSBAR CLAMP	0.048	20195

9Nm

x100 Nos.

TERMINAL SCREWS
TERMINAL SKRUER

TYPE	DESCRIPTION	SIZE	WEIGHT (kg)	ORDER No.
SCR	TERMINAL SCREWS	M6	0.51	20360

Polycarbonate 3mm

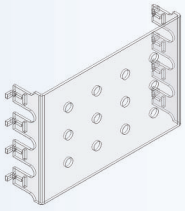

x10 Nos.

COVERS FORM 2
AFDÆKNING FORM 2

TYPE	DESCRIPTION	SIZE (W×H)	WEIGHT kg	ORDER No.
COF 2	COVERS FORM 2	150 × 100	0.36	20390

x100 Nos.

CABLES
KABEL

TYPE	DESCRIPTION	LENGTH	ORDER No.
CABL 1	CABLE 2.5 mm^2	350	65686
CABL 2	CABLE 4 mm^2	350	65687
CABL 3	CABLE 6 mm^2	350	65688
CABL 4	CABLE 10 mm^2	350	65689
CABL 5	CABLE 16 mm^2	350	65690

1

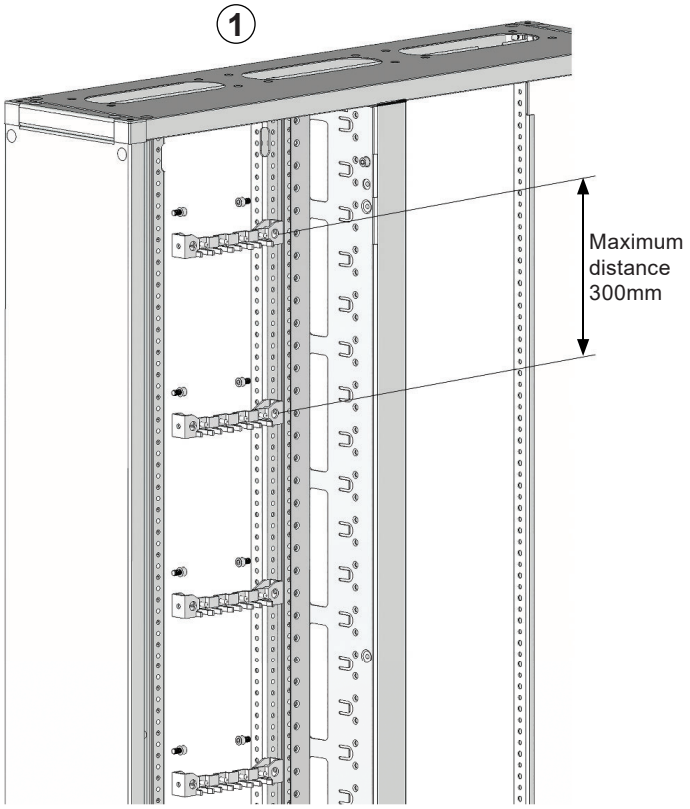
Maximum
distance
300mm

2

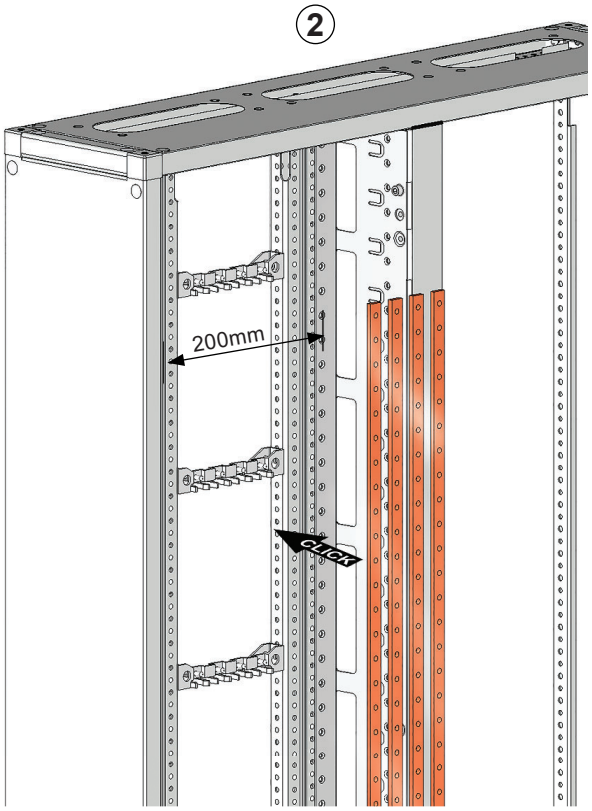
200mm
Click

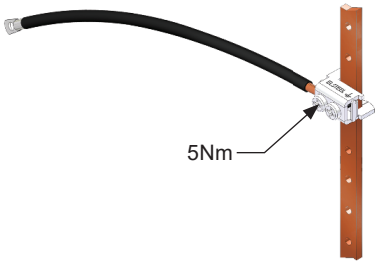
5Nm

3

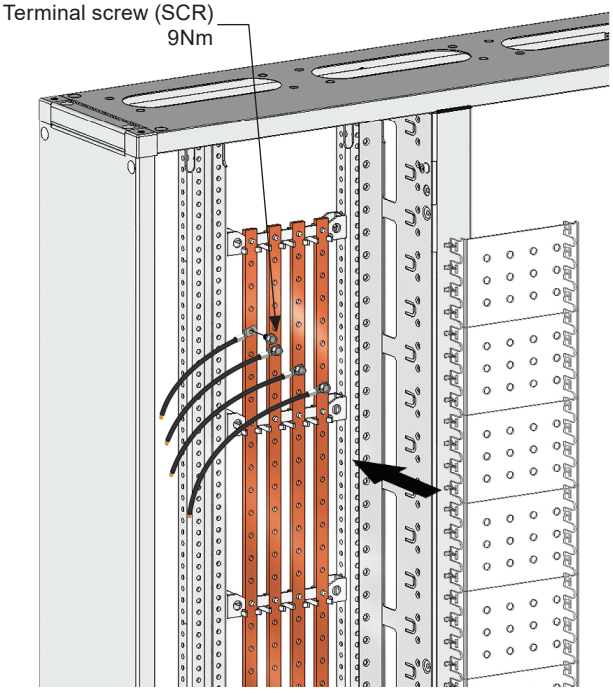
Terminal screw (SCR)
9Nm

4

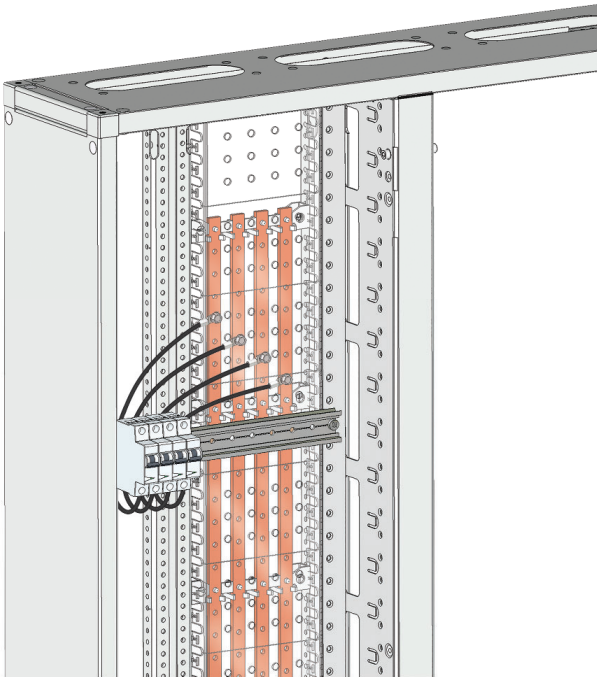

BUSBAR ANGLE 5
(FOR CT INSERT)

SKINNEVINKEL 5
(TIL STRØMMÅLER INDSATS)

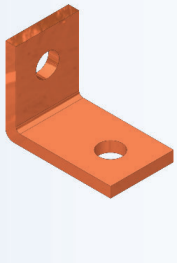

x2

TYPE	DESCRIPTION	SIZE	WEIGHT (kg)	ORDER No.
BAN 5	BUSBAR ANGLE 5	40×50×5	0.1	21456

BUSBAR ANGLE 10
(FOR CT INSERT)

SKINNEVINKEL 10
(TIL STRØMMÅLER INDSATS)

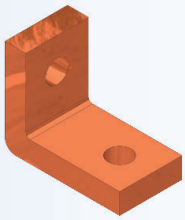

x2

TYPE	DESCRIPTION	SIZE	WEIGHT (kg)	ORDER No.
BAN 10	BUSBAR ANGLE 10	45×55×10	0.205	21458

BUSBAR BOLT

SKINNE BOLT

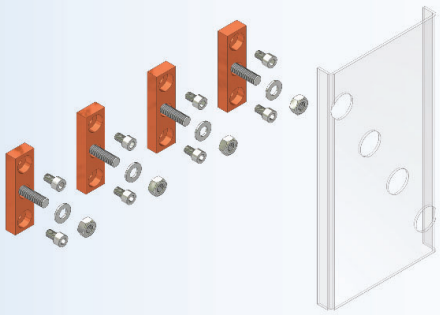

TYPE	DESCRIPTION	SIZE	RATED CURRENT (A)	WEIGHT (kg)	ORDER No.
BBT 8	BUSBAR BOLT	M8	400	6.5	21452
BBT 10	BUSBAR BOLT	M10	400	6.6	21454

FORM 2 PC COVER

FORM 2 AFDÆKNING

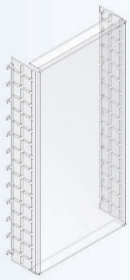

TYPE	DESCRIPTION	WEIGHT (kg)	ORDER No.
F2PC	FORM 2 PC COVER	1.7	20393

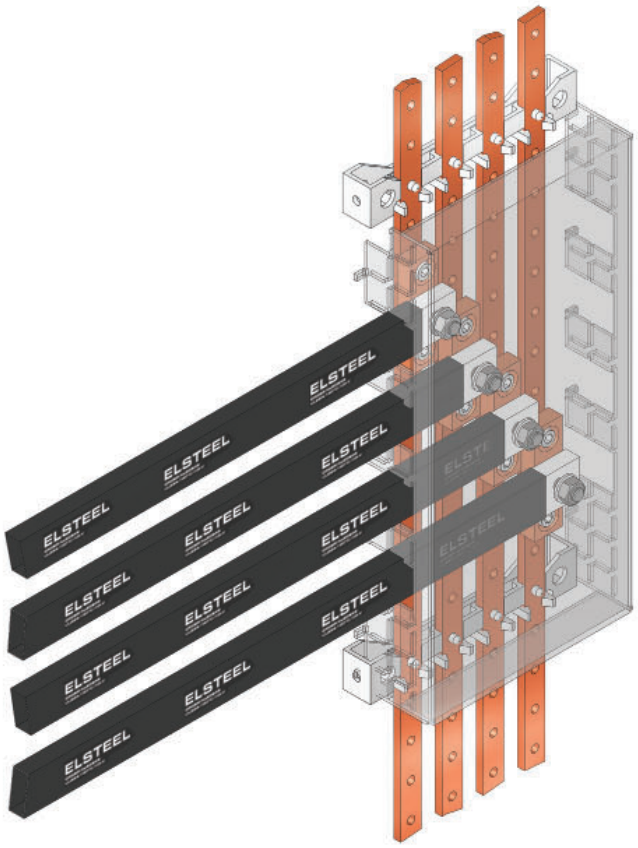
ELSTEEL

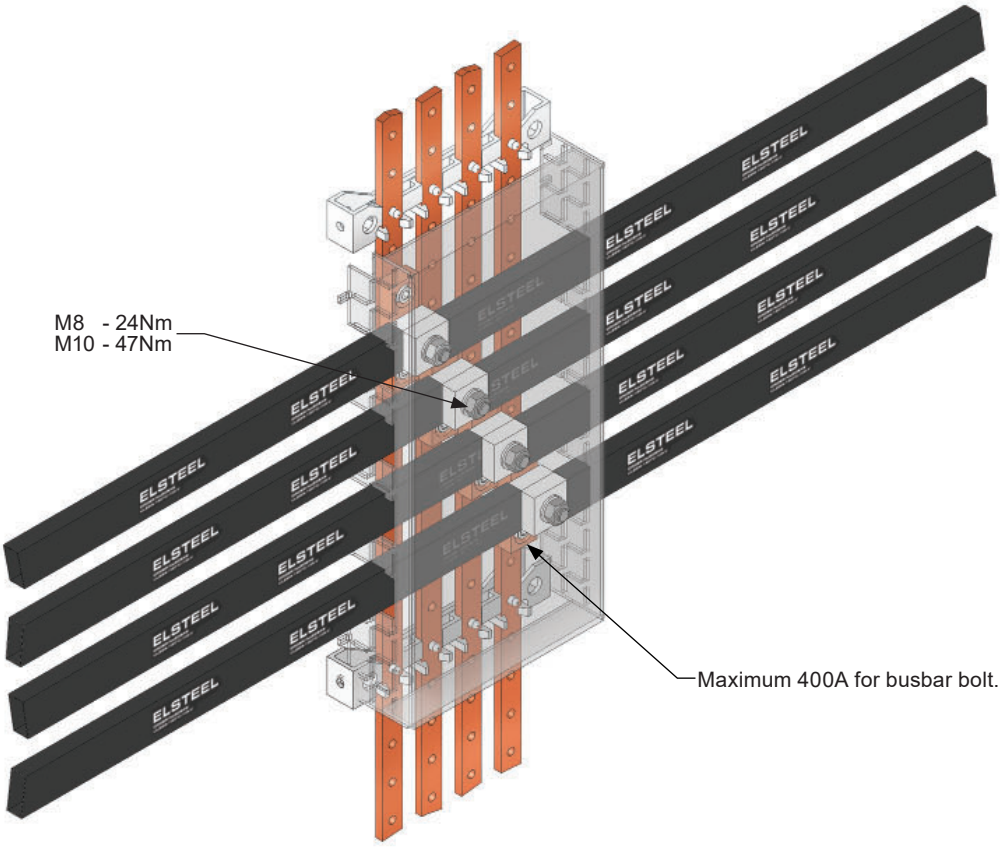
M8 - 24Nm
M10 - 47Nm
Maximum 400A for busbar bolt.
ELSTEEL

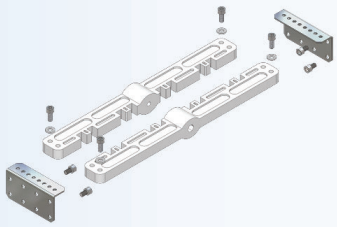

UNIVERSAL BUSBAR HOLDER (FOR Cu BUSBAR)

UNIVERSAL SKINNEHOLDER (TIL Cu SKINNE)

TYPE	DESCRIPTION	RAIL LENGTH	MAX. Cu SIZE	MAX. QTY. CONDUCTORS PER PHASE	PHASE CENTERS	WEIGHT (kg)	ORDER No.
UBH 1	UNIVERSAL BUSBAR HOLDER	90	10×40	2	75	0.59	20550

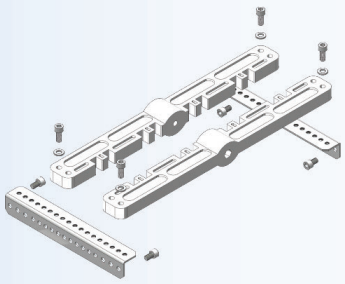

UNIVERSAL BUSBAR HOLDER (FOR Al BUSBAR)

UNIVERSAL SKINNEHOLDER (TIL Al SKINNE)

TYPE	DESCRIPTION	RAIL LENGTH	MAX. Al SIZE	MAX. QTY. CONDUCTORS PER PHASE	PHASE CENTERS	WEIGHT (kg)	ORDER No.
UBH 2	UNIVERSAL BUSBAR HOLDER	190	10×100	2	75	0.65	20560
UBH 3	UNIVERSAL BUSBAR HOLDER	390	10×100	2	75	0.90	20563

Note : For full technical specification, please refer to relevant design verification on www.elsteel.com
IEC 61439-2 requirements regarding busbar clearances must be followed when installing any busbar system.

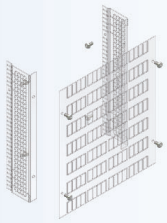

FORM 2 COVER (FOR UBH)

FORM 2 AFDÆKNING (TIL UBH)

TYPE	DESCRIPTION	SIZE (W×H)	WEIGHT (kg)	ORDER No.
F2CUB	FORM 2 COVER	350×400	0.57	20391

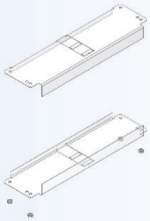

TOP & BOTTOM FORM 2 COVER (FOR UBH)

TOP & BUND FORM 2 AFDÆKNING (TIL UBH)

TYPE	DESCRIPTION	SIZE (W×H)	WEIGHT (kg)	ORDER No.
F2CTB	TOP & BOTTOM FORM 2 COVER		0.16	20392

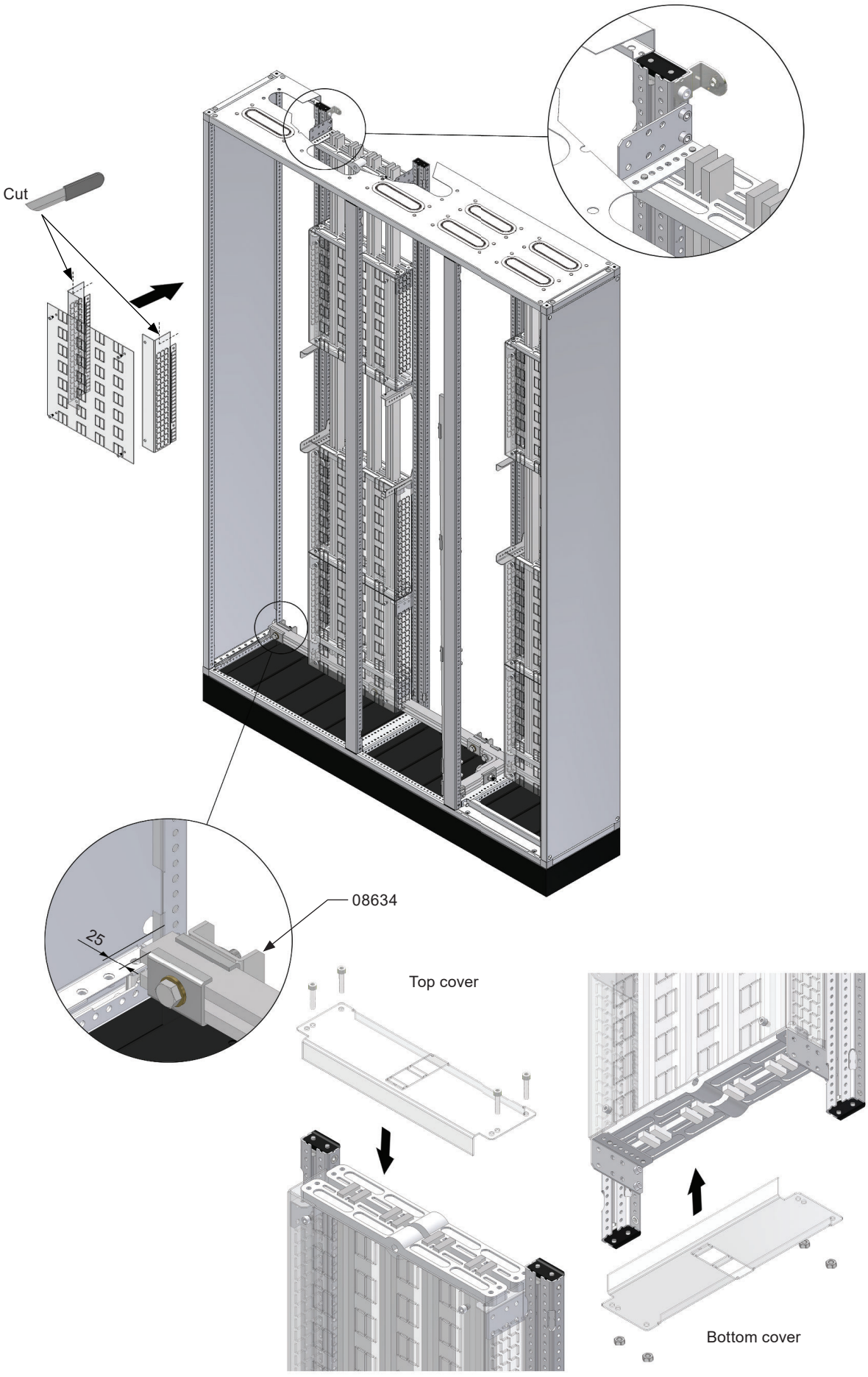
Cut
08634
25
Top cover
Bottom cover

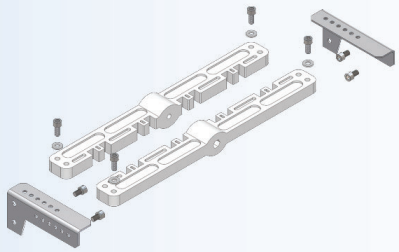

UNIVERSAL BUSBAR HOLDER (FOR HORIZONTAL TO VERTICAL CONNECTION)

UNIVERSAL SKINNEHOLDER (TIL HORISONTAL-VERTIKAL FORBINDELSE)

TYPE	DESCRIPTION	RAIL LENGTH	MAX. Cu SIZE	MAX. QTY. CONDUCTORS PER PHASE	PHASE CENTRES	WEIGHT (kg)	ORDER No.
UBH1 HV	UNIVERSAL BUSBAR HOLDER	90	10×40	2	75	0.611	20890

Note : For full technical specification, please refer to relevant design verification on www.elsteel.com
IEC 61439-2 requirements regarding busbar clearances must be followed when installing any busbar system.

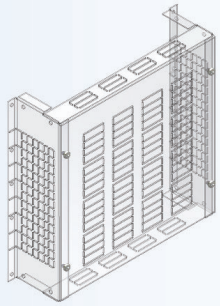

FORM 2 COVERS (FOR HORIZONTAL TO VERTICAL CONNECTION)

AFDÆKNING (TIL HORISONTAL-VERTIKAL FORBINDELSE)

TYPE	DESCRIPTION	SIZE (W×H)	WEIGHT (kg)	ORDER No.
F2CHT	FORM 2 COVERS		0.75	20395

CF2CP4

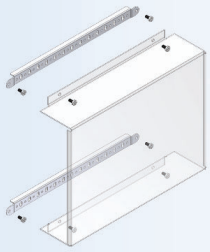

CF2CP6

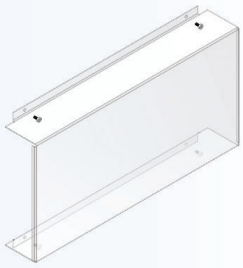

CROSS OVER FORM 2 COVER PLATE

FORM 2 AFDÆKNING

TYPE	DESCRIPTION	SIZE (W)	WEIGHT (kg)	ORDER No.
CF2CP4	CROSS OVER FORM 2 COVER PLATE	400	1.25	20396
CF2CP6	CROSS OVER FORM 2 COVER PLATE	600	1.88	20397

400 WIDE SECTION

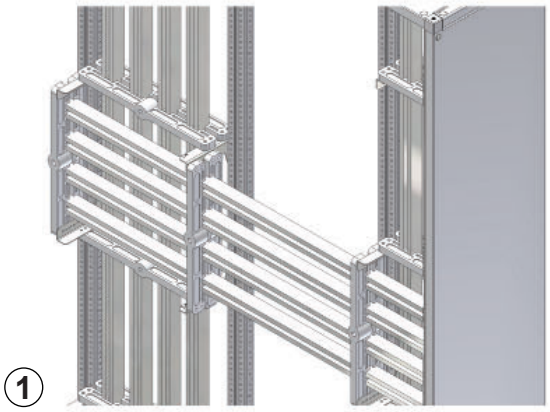

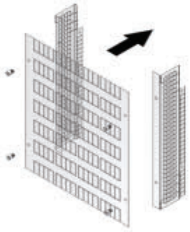

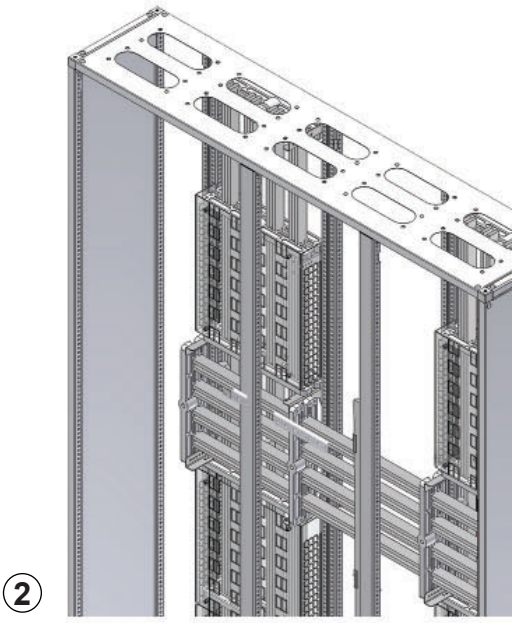

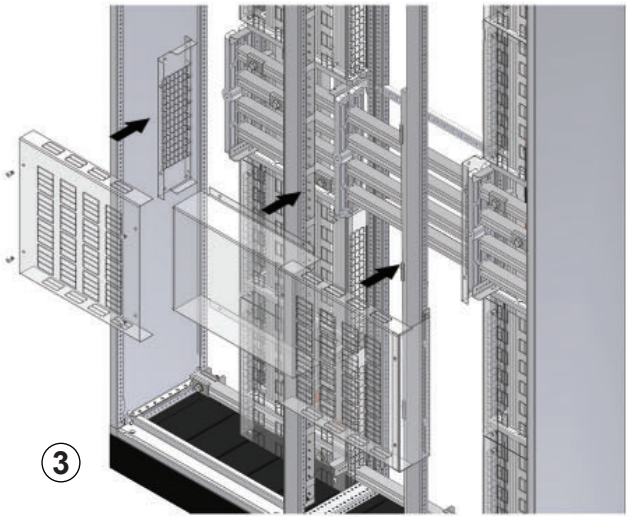

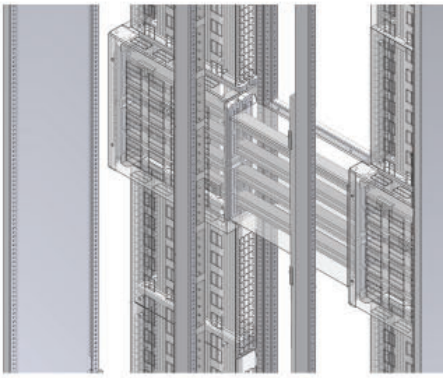

600 WIDE SECTION

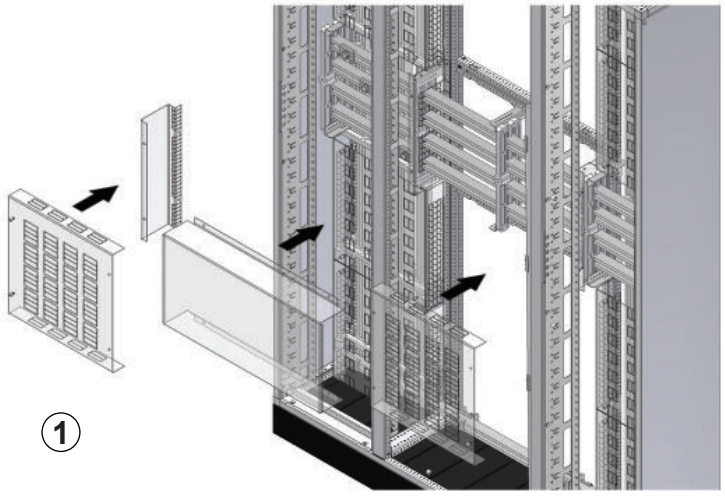

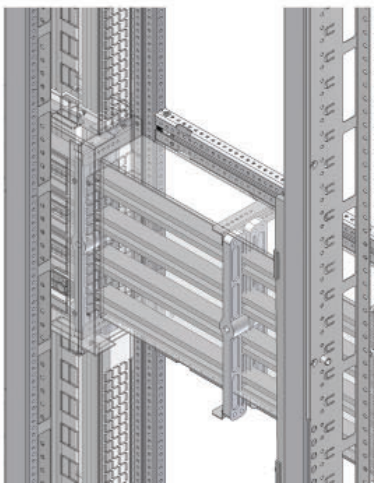

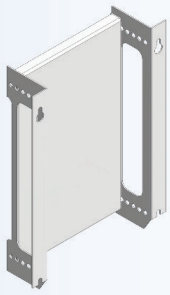

ADJUSTABLE MOUNTING PLATE

JUSTERBAR MONTAGEPLADE

TYPE	DESCRIPTION	SIZE (W×H)	WEIGHT (kg)	ORDER No. Alu-zinc
AMDB 3.1-5	ADJUSTABLE MOUNTING PLATE	300×150	0.62	65430
AMDB 3.2	ADJUSTABLE MOUNTING PLATE	300×200	0.82	65431
AMDB 3.3	ADJUSTABLE MOUNTING PLATE	300×300	1.12	65432
AMDB 3.4-5	ADJUSTABLE MOUNTING PLATE	300×450	1.68	65434
AMDB 4.1-5	ADJUSTABLE MOUNTING PLATE	400×150	0.75	65400
AMDB 4.2	ADJUSTABLE MOUNTING PLATE	400×200	1.09	65401
AMDB 4.3	ADJUSTABLE MOUNTING PLATE	400×300	1.50	65405
AMDB 4.4-5	ADJUSTABLE MOUNTING PLATE	400×450	2.25	65410
AMDB 5.1-5	ADJUSTABLE MOUNTING PLATE	500×150	0.92	65436
AMDB 5.2	ADJUSTABLE MOUNTING PLATE	500×200	1.36	65437
AMDB 5.3	ADJUSTABLE MOUNTING PLATE	500×300	1.85	65438
AMDB 5.4-5	ADJUSTABLE MOUNTING PLATE	500×450	2.78	65440
AMDB 6.1-5	ADJUSTABLE MOUNTING PLATE	600×150	1.25	65415
AMDB 6.2	ADJUSTABLE MOUNTING PLATE	600×200	1.63	65416
AMDB 6.3	ADJUSTABLE MOUNTING PLATE	600×300	2.23	65420
AMDB 6.4-5	ADJUSTABLE MOUNTING PLATE	600×450	3.21	65425

FIXED TYPE MOUNTING PLATE

FAST MONTAGEPLADE

TYPE	DESCRIPTION	SIZE (W×H)	WEIGHT (kg)	ORDER No. Alu-zinc
FMDB 3.1-5	FIXED TYPE MOUNTING PLATE	300×150	0.40	65600
FMDB 3.2	FIXED TYPE MOUNTING PLATE	300×200	0.53	65601
FMDB 3.3	FIXED TYPE MOUNTING PLATE	300×300	0.81	65602
FMDB 3.4-5	FIXED TYPE MOUNTING PLATE	300×450	1.22	65604
FMDB 3.6	FIXED TYPE MOUNTING PLATE	300×600	1.63	65606
FMDB 4.1-5	FIXED TYPE MOUNTING PLATE	400×150	0.62	65608
FMDB 4.2	FIXED TYPE MOUNTING PLATE	400×200	0.82	65609
FMDB 4.3	FIXED TYPE MOUNTING PLATE	400×300	1.25	65610
FMDB 4.4-5	FIXED TYPE MOUNTING PLATE	400×450	1.71	65612
FMDB 4.6	FIXED TYPE MOUNTING PLATE	400×600	2.50	65614
FMDB 5.1-5	FIXED TYPE MOUNTING PLATE	500×150	0.78	65616
FMDB 5.2	FIXED TYPE MOUNTING PLATE	500×200	1.04	65617
FMDB 5.3	FIXED TYPE MOUNTING PLATE	500×300	1.56	65618
FMDB 5.4-5	FIXED TYPE MOUNTING PLATE	500×450	2.34	65620
FMDB 5.6	FIXED TYPE MOUNTING PLATE	500×600	3.12	65622
FMDB 6.1-5	FIXED TYPE MOUNTING PLATE	600×150	0.98	65624
FMDB 6.2	FIXED TYPE MOUNTING PLATE	600×200	1.30	65625
FMDB 6.3	FIXED TYPE MOUNTING PLATE	600×300	1.96	65626
FMDB 6.4-5	FIXED TYPE MOUNTING PLATE	600×450	2.94	65628
FMDB 6.6	FIXED TYPE MOUNTING PLATE	600×600	3.93	65630

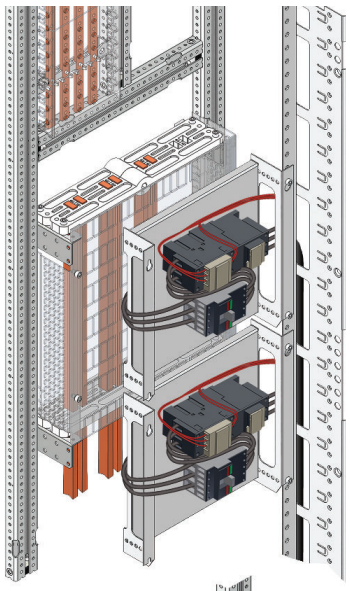

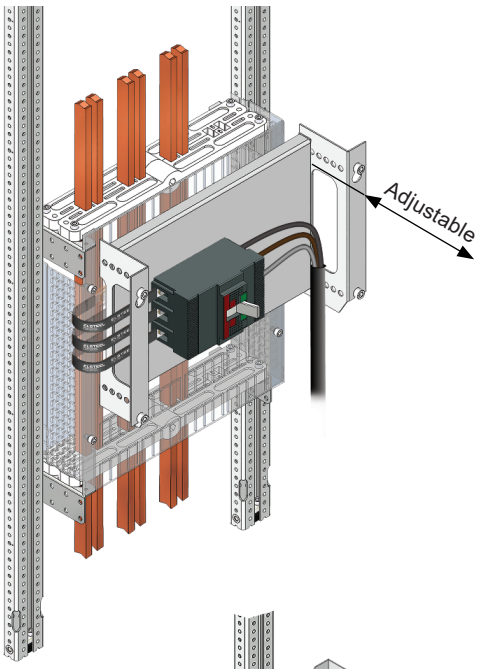

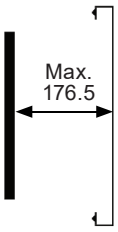

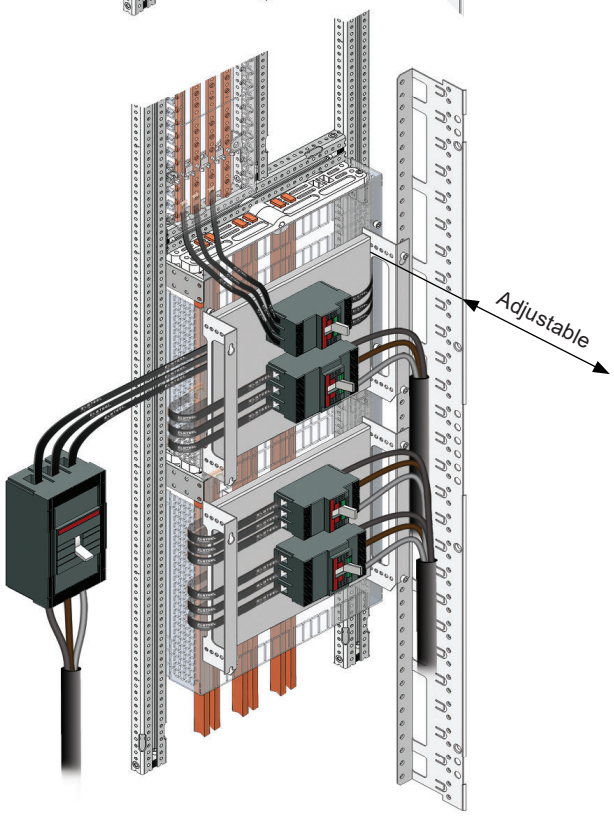

Use verified ELSTEEL flexi bars

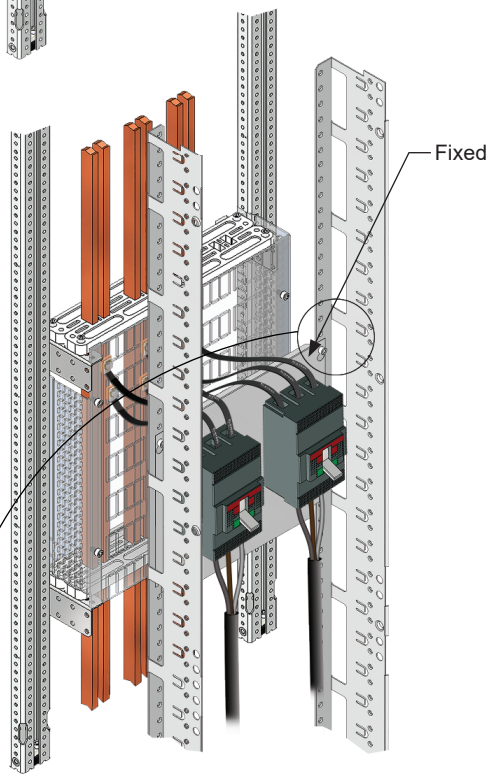

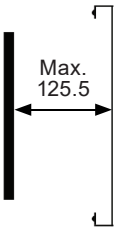

Maximum torque 7Nm

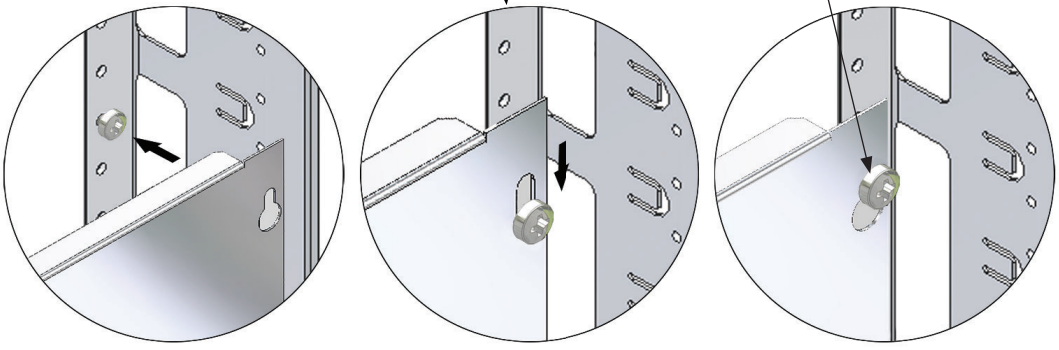

1 2 3

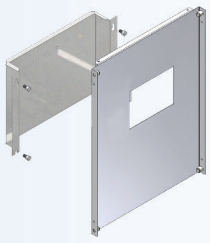

INSERT VERTICAL (ABB)

INDSATSE VERTIKAL (ABB)

TYPE	DESCRIPTION	SIZE (W×H)	No. OF BREAKERS	No. OF POLES	BREAKER TYPE	WEIGHT (kg)	ORDER No. RAL 9010 SMF	ORDER No. RAL 7035 FTF
VIA3-20 3.3	INSERT VERTICAL ABB	300 × 300	1	3	XT1 160	1.45	66025	64631
VIA4-21 3.3	INSERT VERTICAL ABB	300 × 300	1	4	XT1 160	1.45	66150	64828
VIA3-22 4.3	INSERT VERTICAL ABB	400 × 300	2	3	XT1 160	2.01	66026	64632
VIA4-23 4.3	INSERT VERTICAL ABB	400 × 300	2	4	XT1 160	2.01	66151	64829
VIA3-24 5.3	INSERT VERTICAL ABB	500 × 300	3	3	XT1 160	2.58	66027	64633
VIA4-25 5.3	INSERT VERTICAL ABB	500 × 300	2	4	XT1 160	2.58	66152	64830
VIA3-26 6.3	INSERT VERTICAL ABB	600 × 300	4	3	XT1 160	3.18	66028	64634
VIA4-27 6.3	INSERT VERTICAL ABB	600 × 300	4	4	XT1 160	3.14	66153	64831
VIA34-36 3.3	INSERT VERTICAL ABB	300 × 300	1	3/4	XT2 160	1.53	66275	66264
VIA34-37 4.3	INSERT VERTICAL ABB	400 × 300	2	3/4	XT2 160	2.11	66276	66265
VIA34-38 5.3	INSERT VERTICAL ABB	500 × 300	3	3/4	XT2 160	2.69	66277	66266
VIA3-39 6.3	INSERT VERTICAL ABB	600 × 300	4	3	XT2 160	3.28	66278	66267
VIA4-40 6.3	INSERT VERTICAL ABB	600 × 300	3	4	XT2 160	3.28	66279	66268
VIA3-28 4.3	INSERT VERTICAL ABB	400 × 300	1	3	XT3 250	2.01	66029	64635
VIA4-29 4.3	INSERT VERTICAL ABB	400 × 300	1	4	XT3 250	2.01	66154	64832
VIA3-30 5.3	INSERT VERTICAL ABB	500 × 300	2	3	XT3 250	2.58	66023	64629
VIA4-31 5.3	INSERT VERTICAL ABB	500 × 300	2	4	XT3 250	2.58	66155	64833
VIA3-32 6.3	INSERT VERTICAL ABB	600 × 300	2	3	XT3 250	3.14	65999	64628
VIA4-33 6.3	INSERT VERTICAL ABB	600 × 300	2	4	XT3 250	3.14	66157	64835
VIA3-34 3.4-5	INSERT VERTICAL ABB	300 × 450	1	3	XT3 250	2.25	66024	64630
VIA4-35 3.4-5	INSERT VERTICAL ABB	300 × 450	1	4	XT3 250	2.25	66156	64834
VIA3-41 4.3	INSERT VERTICAL ABB	400 × 300	2	3	XT4 250	2.11	66280	66269
VIA4-42 4.3	INSERT VERTICAL ABB	400 × 300	1	4	XT4 250	2.11	66281	66270
VIA3-43 5.3	INSERT VERTICAL ABB	500 × 300	3	3	XT4 250	2.69	66282	66271
VIA4-44 5.3	INSERT VERTICAL ABB	500 × 300	2	4	XT4 250	2.69	66283	66272
VIA34-45 6.3	INSERT VERTICAL ABB	600 × 300	3	3/4	XT4 250	3.28	66284	66273
VIA34-46 3.4-5	INSERT VERTICAL ABB	300 × 450	1	3/4	XT4 250	2.37	66285	66274
VIA3-47 3.3	INSERT VERTICAL ABB	300 × 300	1	3	XT5 400/630	1.66	66286	66296
VIA34-48 4.3	INSERT VERTICAL ABB	400 × 300	1	3/4	XT5 400/630	2.19	66287	66297
VIA34-49 5.3	INSERT VERTICAL ABB	500 × 300	1	3/4	XT5 400/630	2.72	66288	66298
VIA34-50 6.3	INSERT VERTICAL ABB	600 × 300	1	3/4	XT5 400/630	3.25	66289	66299
VIA3-51 4.4	INSERT VERTICAL ABB	400 × 400	1	3	XT6 1600	2.93	66290	66070
VIA34-52 5.4	INSERT VERTICAL ABB	500 × 400	1	3/4	XT6 1600	3.66	66291	66071
VIA34-53 6.4	INSERT VERTICAL ABB	600 × 400	1	3/4	XT6 1600	4.38	66292	66072
VIA3-94 4.4	INSERT VERTICAL ABB	400 × 400	1	3	XT7 1600	3.56	66720	66723
VIA34-95 5.4	INSERT VERTICAL ABB	500 × 400	1	3/4	XT7 1600	4.29	66721	66724
VIA34-96 6.4	INSERT VERTICAL ABB	600 × 400	1	3/4	XT7 1600	5.02	66722	66725

* Rear connection only

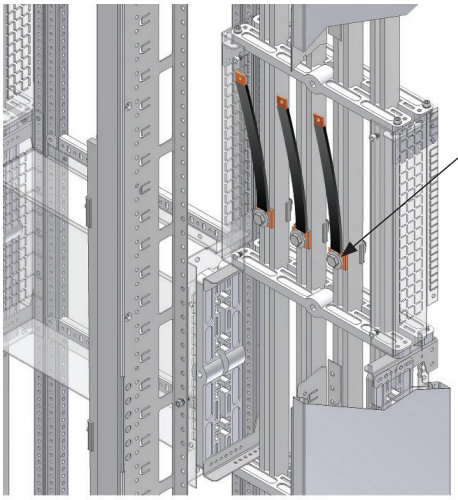
1
47Nm

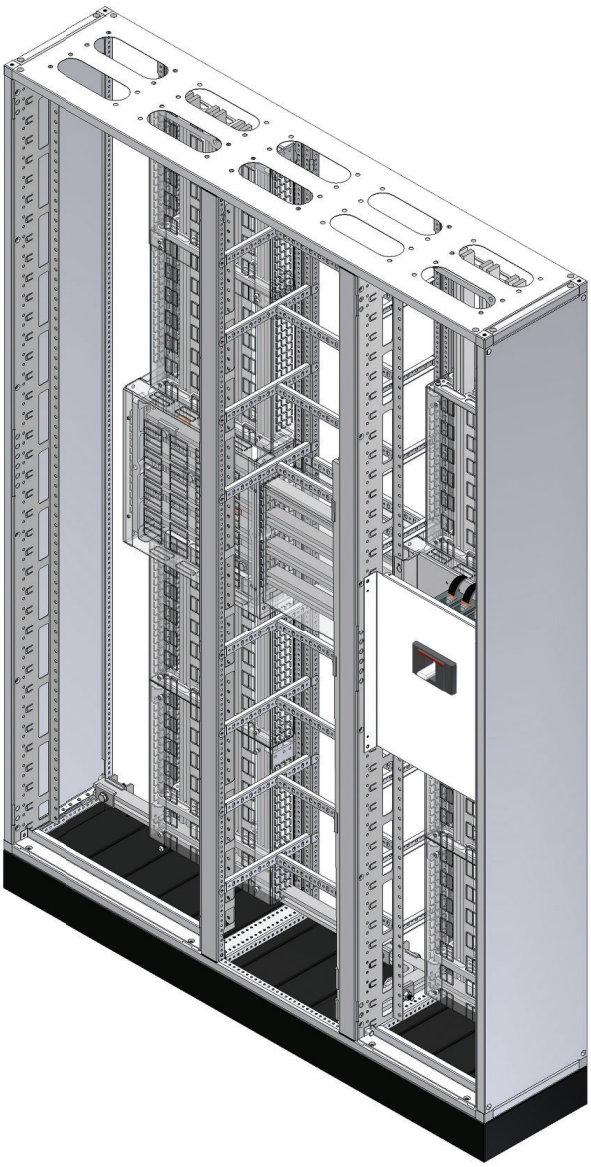

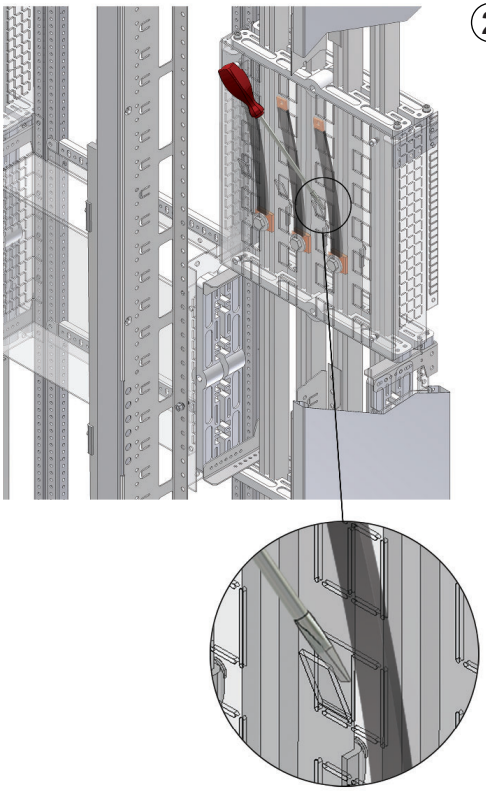
2

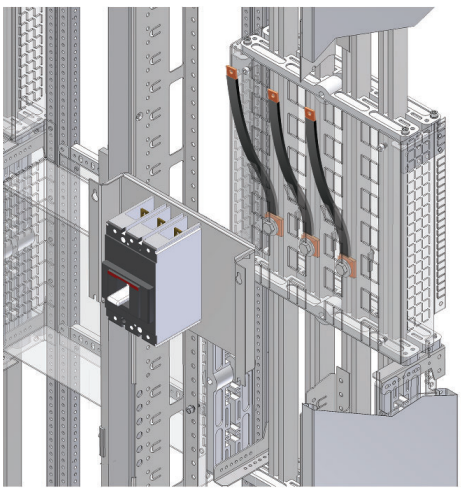
3

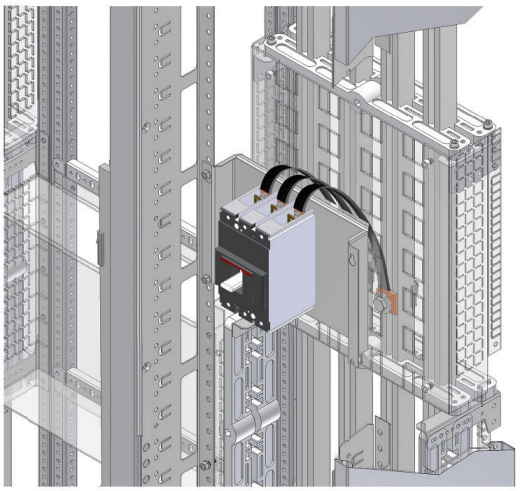
4

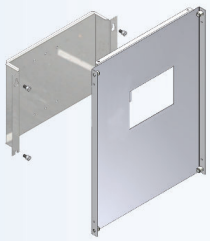

INSERT VERTICAL (EATON)

INDSATSE VERTIKAL (EATON)

TYPE	DESCRIPTION	SIZE (W×H)	No. OF BREAKERS	No. OF POLES	BREAKER TYPE	WEIGHT (kg)	ORDER No. RAL 9010 SMF	ORDER No. RAL 7035 FTF
VIE3-1 3.3	INSERT VERTICAL EATON	300×300	1	3	NZM1 160	1.51	66100	64713
VIE4-2 3.3	INSERT VERTICAL EATON	300×300	1	4	NZM1 160	1.52	66115	64726
VIE3-3 4.3	INSERT VERTICAL EATON	400×300	2	3	NZM1 160	2.11	66101	64714
VIE4-4 4.3	INSERT VERTICAL EATON	400×300	2	4	NZM1 160	2.11	66116	64727
VIE3-5 5.3	INSERT VERTICAL EATON	500×300	3	3	NZM1 160	2.70	66110	64723
VIE4-6 5.3	INSERT VERTICAL EATON	500×300	2	4	NZM1 160	2.70	66126	64731
VIE3-7 6.3	INSERT VERTICAL EATON	600×300	4	3	NZM1 160	3.29	66102	64715
VIE4-8 6.3	INSERT VERTICAL EATON	600×300	3	4	NZM1 160	3.29	66117	64728
VIE34-9 4.3	INSERT VERTICAL EATON	400×300	1	3/4	NZM2 250	2.37	66103	64716
VIE34-10 5.3	INSERT VERTICAL EATON	500×300	2	3/4	NZM2 250	2.98	66111	64724
VIE34-11 6.3	INSERT VERTICAL EATON	600×300	2	3/4	NZM2 250	3.59	66105	64718
VIE3-12 3.4-5	INSERT VERTICAL EATON	300×450	1	3	NZM2 250	2.74	66104	64717
VIE4-13 3.4-5	INSERT VERTICAL EATON	300×450	1	4	NZM2 250	2.74	66119	64729
VIE3-14 5.4-5	INSERT VERTICAL EATON	500×450	2	3	NZM3 630	4.81	66112	64725
VIE4-15 5.4-5	INSERT VERTICAL EATON	500×450	2	4	NZM3 630	4.81	66127	64732
VIE3-16 6.4-5	INSERT VERTICAL EATON	600×450	2	3	NZM3 630	5.76	66108	64721
VIE4-17 6.4-5	INSERT VERTICAL EATON	600×450	2	4	NZM3 630	5.76	66123	64730
VIE34-18 6.4-5	INSERT VERTICAL EATON	600×450	1	3/4	NZM3 630	5.76	66106	64719
VIE3-19 3.6	INSERT VERTICAL EATON	300×600	1	3	NZM3 630	3.82	66107	64720
VIE34-20 4.6	INSERT VERTICAL EATON	400×600	1	3/4	NZM3 630	5.23	66109	64722
VIE3-21 4.6	INSERT VERTICAL EATON	400×600	1	3	NZM4 1600	5.23	66097	64802
VIE3-22 5.6	INSERT VERTICAL EATON	500×600	1	3	NZM4 1600	6.41	66098	64803
VIE4-23 5.6	INSERT VERTICAL EATON	500×600	1	4	NZM4 1600	6.41	66113	64805
VIE3-24 6.6	INSERT VERTICAL EATON	600×600	1	3	NZM4 1600	7.59	66099	64804

* Rear connection only

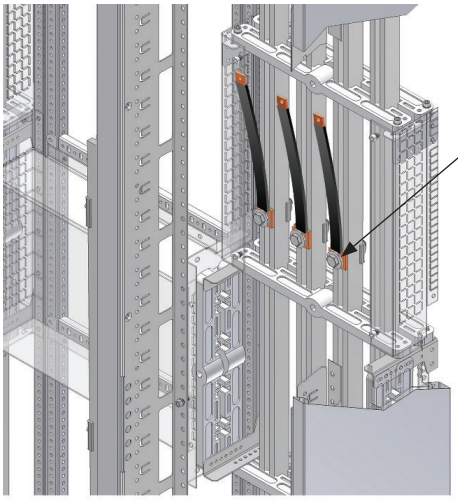
1
47Nm

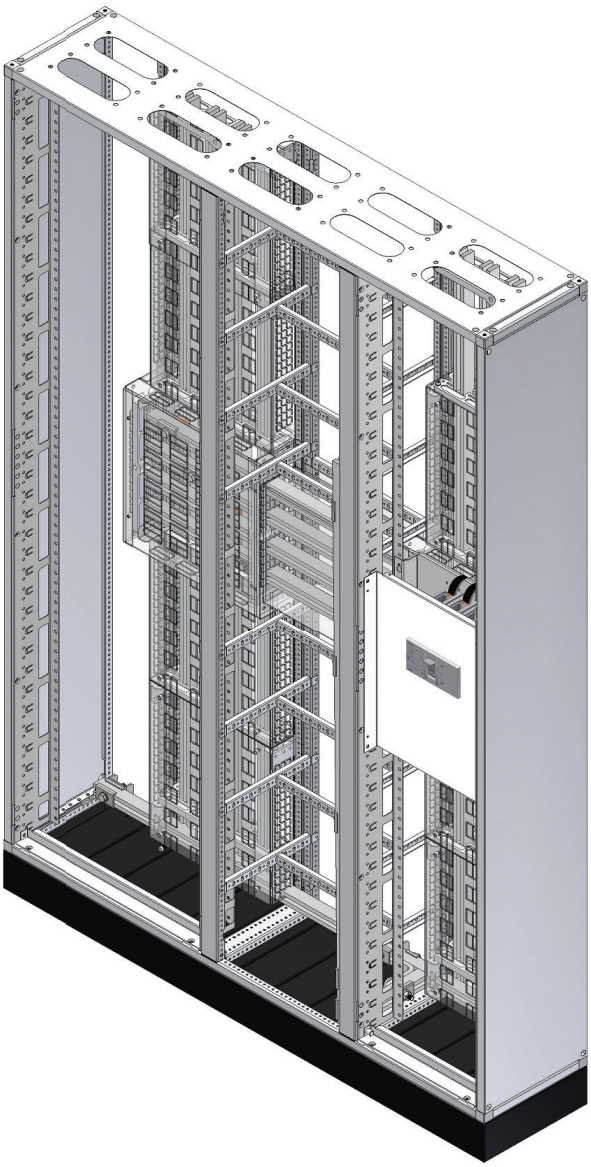

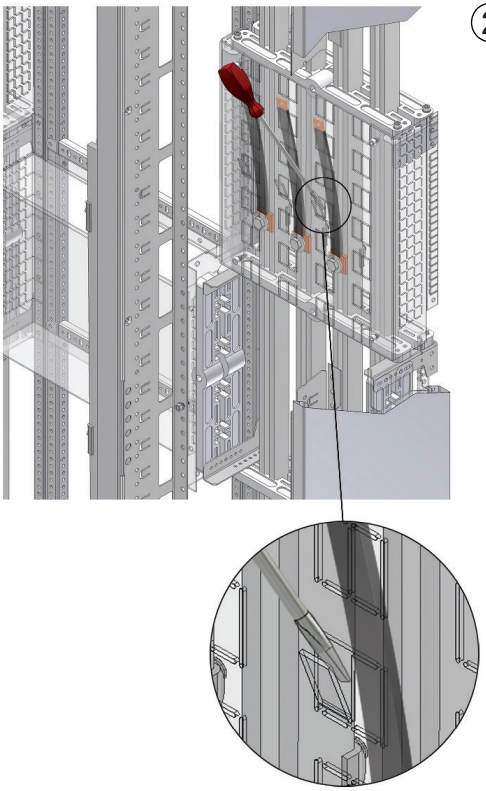
2

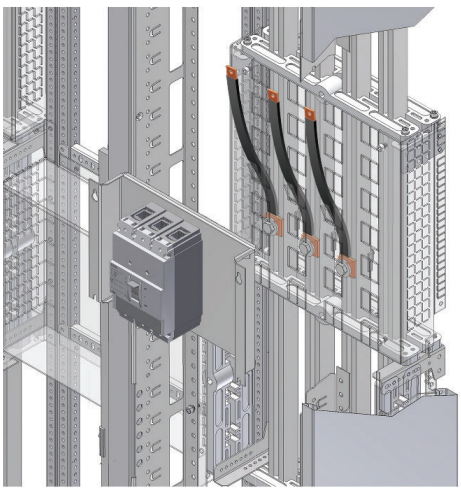
3

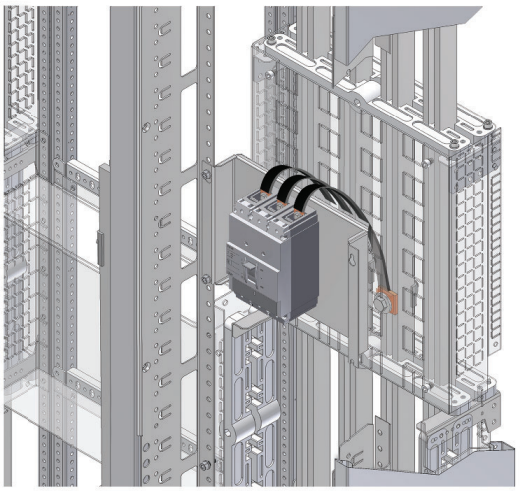
4

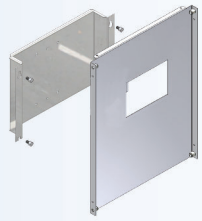

INSERT VERTICAL (SCHNEIDER ELECTRIC)

INDSATSE VERTIKAL (SCHNEIDER ELECTRIC)

TYPE	DESCRIPTION	SIZE (W×H)	No. OF BREAKERS	No. OF POLES	BREAKER TYPE	WEIGHT (kg)	ORDER No. RAL 9010 SMF	ORDER No. RAL 7035 FTF
VIS3-1 3.2	INSERT VERTICAL SE	300×200	1	3	NSX* 100/160/250	1.16	65928	64636
VIS4-2 3.2	INSERT VERTICAL SE	300×200	1	4	NSX* 100/160/250	1.16	65991	64620
VIS3-3 4.2	INSERT VERTICAL SE	400×200	2	3	NSX* 100/160/250	1.59	65929	64637
VIS4-4 4.2	INSERT VERTICAL SE	400×200	1	4	NSX* 100/160/250	1.59	65992	64621
VIS3-5 5.2	INSERT VERTICAL SE	500×200	3	3	NSX* 100/160/250	2.20	65943	64638
VIS4-6 5.2	INSERT VERTICAL SE	500×200	2	4	NSX* 100/160/250	2.20	65993	64622
VIS3-7 6.2	INSERT VERTICAL SE	600×200	4	3	NSX* 100/160/250	2.45	65944	64639
VIS4-8 6.2	INSERT VERTICAL SE	600×200	3	4	NSX* 100/160/250	2.45	65994	64623
VIS3-9 3.3	INSERT VERTICAL SE	300×300	1	3	NSX 100/160/250	1.59	65931	64677
VIS4-10 3.3	INSERT VERTICAL SE	300×300	1	4	NSX 100/160/250	1.58	65976	64708
VIS3-11 4.3	INSERT VERTICAL SE	400×300	2	3	NSX 100/160/250	2.16	65930	64676
VIS4-12 4.3	INSERT VERTICAL SE	400×300	1	4	NSX 100/160/250	2.16	65975	64707
VIS34-13 4.3	INSERT VERTICAL SE	400×300	1	3	NSX 100/160/250	2.16	65933	64679
VIS3-14 5.3	INSERT VERTICAL SE	500×300	3	3	NSX 100/160/250	2.74	65940	64686
VIS34-15 5.3	INSERT VERTICAL SE	500×300	2	3/4	NSX 100/160/250	2.74	65941	64687
VIS3-16 6.3	INSERT VERTICAL SE	600×300	4	3	NSX 100/160/250	3.33	65932	64678
VIS4-17 6.3	INSERT VERTICAL SE	600×300	3	4	NSX 100/160/250	3.34	65977	64709
VIS34-18 6.3	INSERT VERTICAL SE	600×300	2	3/4	NSX 100/160/250	3.33	65935	64681
VIS3-19 3.4-5	INSERT VERTICAL SE	300×450	1	3	NSX 100/160/250	2.45	65934	64680
VIS4-20 3.4-5	INSERT VERTICAL SE	300×450	1	4	NSX 100/160/250	5.09	65979	64710
VIS3-21 3.4	INSERT VERTICAL SE	300×400	1	3	NSX 400/630	2.53	65995	64797
VIS3-22 4.4	INSERT VERTICAL SE	400×400	1	3	NSX 400/630	3.39	65996	64798
VIS4-23 4.4	INSERT VERTICAL SE	400×400	1	4	NSX 400/630	2.74	65972	64642
VIS3-24 5.4	INSERT VERTICAL SE	500×400	2	3	NSX 400/630	4.24	65997	64799
VIS4-25 5.4	INSERT VERTICAL SE	500×400	2	4	NSX 400/630	3.39	65973	64643
VIS3-26 6.4	INSERT VERTICAL SE	600×400	3	3	NSX 400/630	5.09	65998	64800
VIS4-27 6.4	INSERT VERTICAL SE	600×400	2	4	NSX 400/630	4.24	65974	64644
VIS3-28 5.4-5	INSERT VERTICAL SE	500×450	2	3	NSX 400/630	4.46	65942	64688
VIS4-29 5.4-5	INSERT VERTICAL SE	500×450	2	4	NSX 400/630	3.33	65986	64712
VIS3-30 6.4-5	INSERT VERTICAL SE	600×450	2	3	NSX 400/630	5.36	65938	64684
VIS4-31 6.4-5	INSERT VERTICAL SE	600×450	2	4	NSX 400/630	5.36	65983	64711
VIS34-32 6.4-5	INSERT VERTICAL SE	600×450	1	3/4	NSX 400/630	5.36	65936	64682
VIS3-33 3.6	INSERT VERTICAL SE	300×600	1	3	NSX 400/630	3.61	65937	64683
VIS34-34 4.6	INSERT VERTICAL SE	400×600	1	3/4	NSX 400/630	4.83	65939	64685
VIS3-35 4.4	INSERT VERTICAL SE	400×400	1	3	NS 630b 1600	3.73	65987	64616
VIS3-36 5.4	INSERT VERTICAL SE	500×400	1	3	NS 630b 1600	4.58	65988	64617
VIS4-37 5.4	INSERT VERTICAL SE	500×400	1	4	NS 630b 1600	4.83	65958	64640
VIS3-38 6.4	INSERT VERTICAL SE	600×400	2	3	NS 630b 1600	5.44	65989	64618
VIS4-39 6.4	INSERT VERTICAL SE	600×400	1	4	NS 630b 1600	4.58	65959	64641

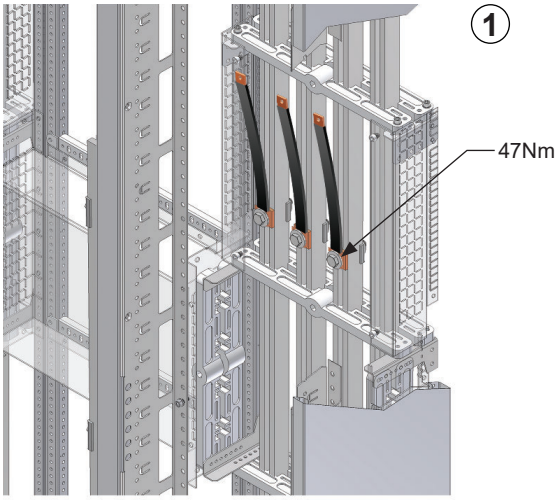
1
47Nm

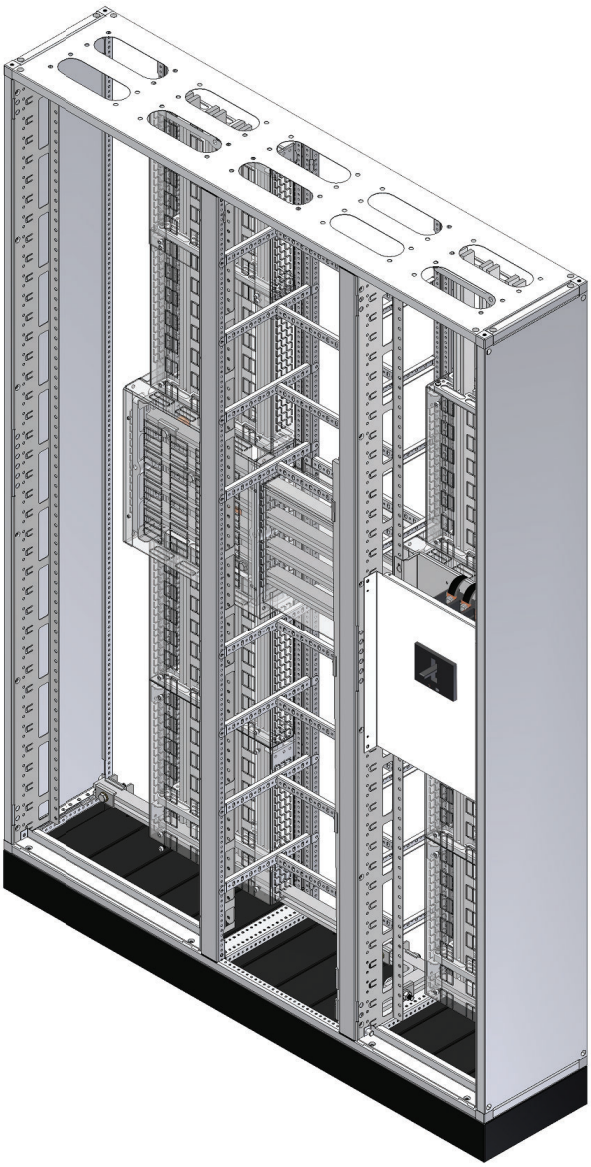

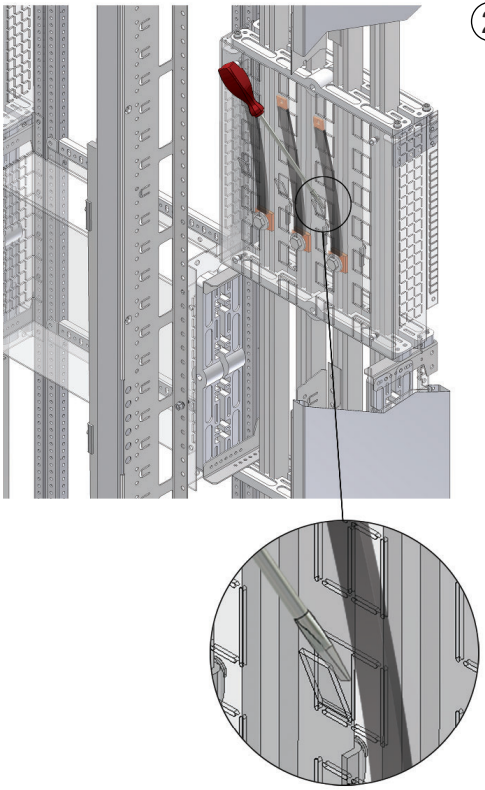
2

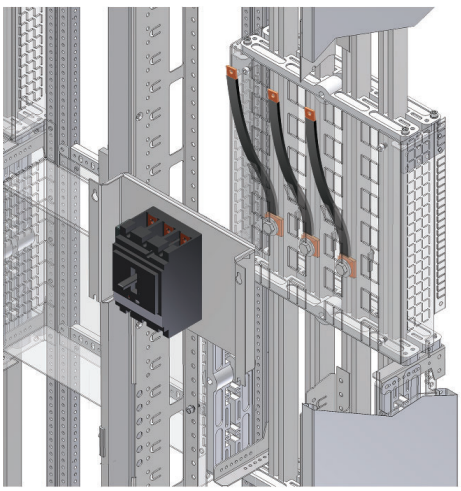
3

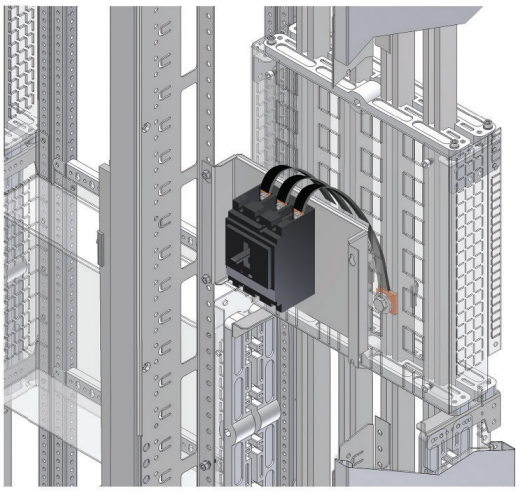
4

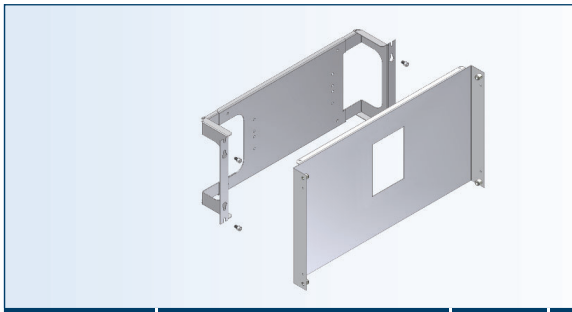

INSERT HORIZONTAL (ABB)

INDSATSE HORISONTAL (ABB)

TYPE	DESCRIPTION	SIZE (W×H)	No. OF BREAKERS	No. OF POLES	BREAKER TYPE	WEIGHT (kg)	ORDER No. RAL 9010 SMF	ORDER No. RAL 7035 FTF
HIA3-19 4.3	INSERT HORIZONTAL ABB	400 × 300	1	3	XT1 160	2.82	66240	64836
HIA4-20 4.3	INSERT HORIZONTAL ABB	400 × 300	1	4	XT1 160	2.82	66246	64842
HIA3-21 5.3	INSERT HORIZONTAL ABB	500 × 300	1	3	XT1 160	3.43	66242	64838
HIA4-22 5.3	INSERT HORIZONTAL ABB	500 × 300	1	4	XT1 160	3.43	66248	64844
HIA3-23 6.3	INSERT HORIZONTAL ABB	600 × 300	1	3	XT1 160	4.04	66244	64840
HIA4-24 6.3	INSERT HORIZONTAL ABB	600 × 300	1	4	XT1 160	4.04	66250	64846
HIA34-31 4.3	INSERT HORIZONTAL ABB	400 × 300	1	3/4	XT2 160	2.82	66258	66252
HIA34-32 5.3	INSERT HORIZONTAL ABB	500 × 300	1	3/4	XT2 160	3.43	66259	66253
HIA34-33 6.3	INSERT HORIZONTAL ABB	600 × 300	1	3/4	XT2 160	4.04	66260	66254
HIA3-25 4.3	INSERT HORIZONTAL ABB	400 × 300	1	3	XT3 250	2.82	66241	64837
HIA4-26 4.3	INSERT HORIZONTAL ABB	400 × 300	1	4	XT3 250	2.82	66247	64843
HIA3-27 5.3	INSERT HORIZONTAL ABB	500 × 300	1	3	XT3 250	3.43	66243	64839
HIA4-28 5.3	INSERT HORIZONTAL ABB	500 × 300	1	4	XT3 250	3.43	66249	64845
HIA3-29 6.3	INSERT HORIZONTAL ABB	600 × 300	1	3	XT3 250	4.04	66245	64841
HIA4-30 6.3	INSERT HORIZONTAL ABB	600 × 300	1	4	XT3 250	4.04	66251	64847
HIA34-34 4.3	INSERT HORIZONTAL ABB	400 × 300	1	3/4	XT4 250	2.82	66261	66255
HIA34-35 5.3	INSERT HORIZONTAL ABB	500 × 300	1	3/4	XT4 250	3.43	66262	66256
HIA34-36 6.3	INSERT HORIZONTAL ABB	600 × 300	1	3/4	XT4 250	4.04	66263	66257
HIA34-37 5.3	INSERT HORIZONTAL ABB	500 × 300	1	3/4	XT5 400/630	3.76	66050	66060
HIA34-38 6.3	INSERT HORIZONTAL ABB	600 × 300	1	3/4	XT5 400/630	4.35	66051	66061
HIA3-39 5.3	INSERT HORIZONTAL ABB	500 × 300	1	3	XT6 1600	3.73	66052	66062
HIA34-40 5.4	INSERT HORIZONTAL ABB	500 × 400	1	3/4	XT6 1600	4.90	66053	66063
HIA3-41 6.3	INSERT HORIZONTAL ABB	600 × 300	1	3	XT6 1600	4.32	66054	66064
HIA34-42 6.4	INSERT HORIZONTAL ABB	600 × 400	1	3/4	XT6 1600	5.68	66055	66065
HIA3-75 5.3	INSERT HORIZONTAL ABB	500 × 300	1	3	XT7 1600	4.06	66726	66730
HIA34-76 5.4	INSERT HORIZONTAL ABB	500 × 400	1	3/4	XT7 1600	5.32	66727	66731
HIA3-77 6.3	INSERT HORIZONTAL ABB	600 × 300	1	3	XT7 1600	4.65	66728	66732
HIA34-78 6.4	INSERT HORIZONTAL ABB	600 × 400	1	3/4	XT7 1600	6.11	66729	66733

* Rear connection only

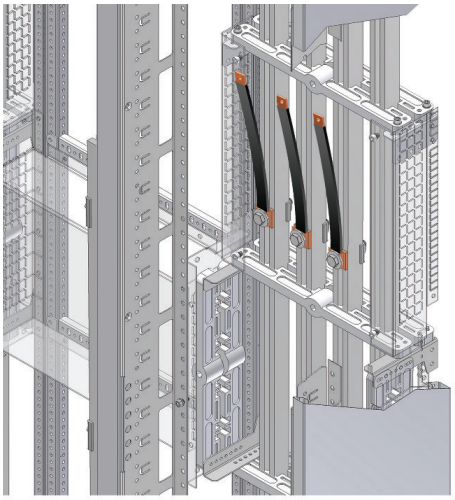

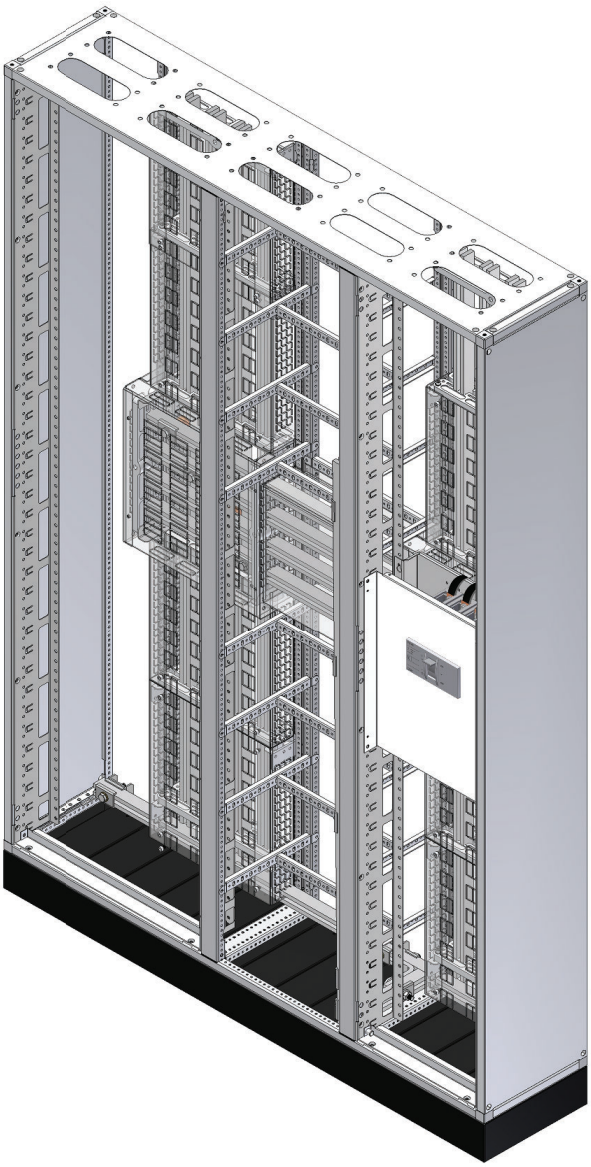

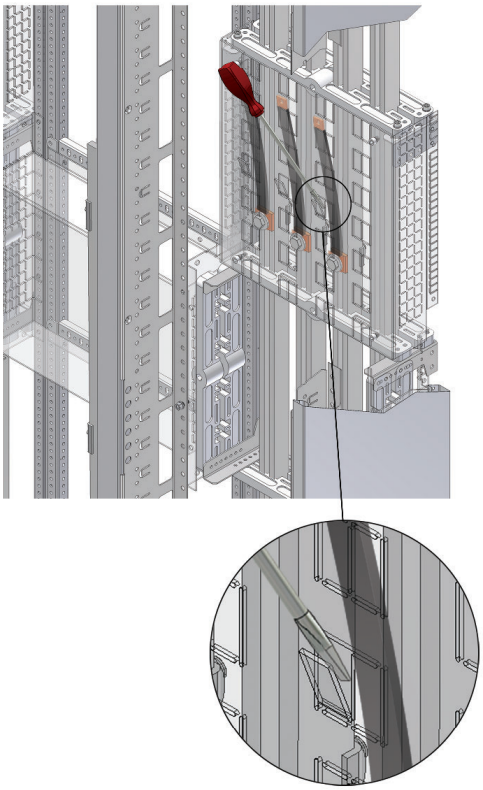

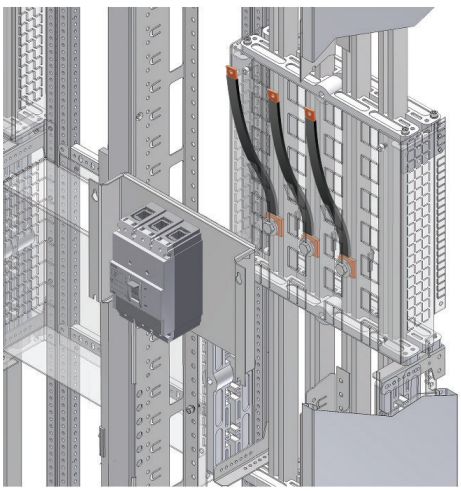

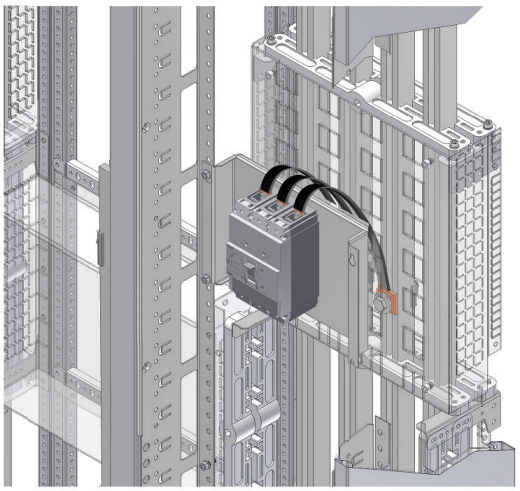

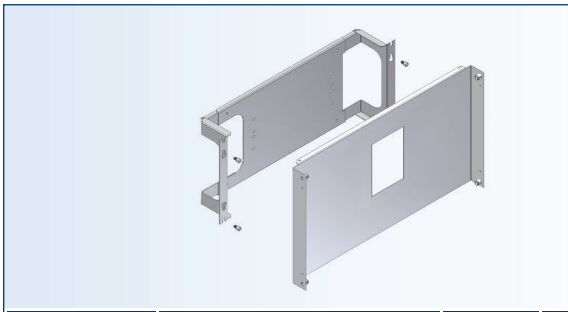

INSERT HORIZONTAL (EATON)

INDSATSE HORISONTAL (EATON)

TYPE	DESCRIPTION	SIZE (W×H)	No. OF BREAKERS	No. OF POLES	BREAKER TYPE	WEIGHT (kg)	ORDER No. RAL 9010 SMF	ORDER No. RAL 7035 FTF
HIE3-1 4.3	INSERT HORIZONTAL EATON	400×300	1	3	NZM1 160	2.78	66190	64755
HIE4-2 4.3	INSERT HORIZONTAL EATON	400×300	1	4	NZM1 160	2.78	66230	64785
HIE3-3 5.3	INSERT HORIZONTAL EATON	500×300	1	3	NZM1 160	3.39	66192	64757
HIE4-4 5.3	INSERT HORIZONTAL EATON	500×300	1	4	NZM1 160	3.39	66232	64787
HIE3-5 6.3	INSERT HORIZONTAL EATON	600×300	1	3	NZM1 160	4.00	66195	64760
HIE4-6 6.3	INSERT HORIZONTAL EATON	600×300	1	4	NZM1 160	4.00	66235	64790
HIE3-7 4.3	INSERT HORIZONTAL EATON	400×300	1	3	NZM2 250	3.05	66191	64756
HIE4-8 4.3	INSERT HORIZONTAL EATON	400×300	1	4	NZM2 250	3.05	66231	64786
HIE3-9 5.3	INSERT HORIZONTAL EATON	500×300	1	3	NZM2 250	3.61	66193	64758
HIE4-10 5.3	INSERT HORIZONTAL EATON	500×300	1	4	NZM2 250	3.61	66233	64788
HIE3-11 6.3	INSERT HORIZONTAL EATON	600×300	1	3	NZM2 250	4.22	66196	64761
HIE4-12 6.3	INSERT HORIZONTAL EATON	600×300	1	4	NZM2 250	4.22	66236	64791
HIE3-13 5.3	INSERT HORIZONTAL EATON	500×300	1	3	NZM3 630	3.84	66194	64759
HIE3-14 6.3	INSERT HORIZONTAL EATON	600×300	1	3	NZM3 630	4.43	66197	64762
HIE4-15 5.4-5	INSERT HORIZONTAL EATON	500×450	1	4	NZM3 630	5.9	66234	64789
HIE4-16 6.4-5	INSERT HORIZONTAL EATON	600×450	1	4	NZM3 630	6.82	66237	64792

* Rear connection only

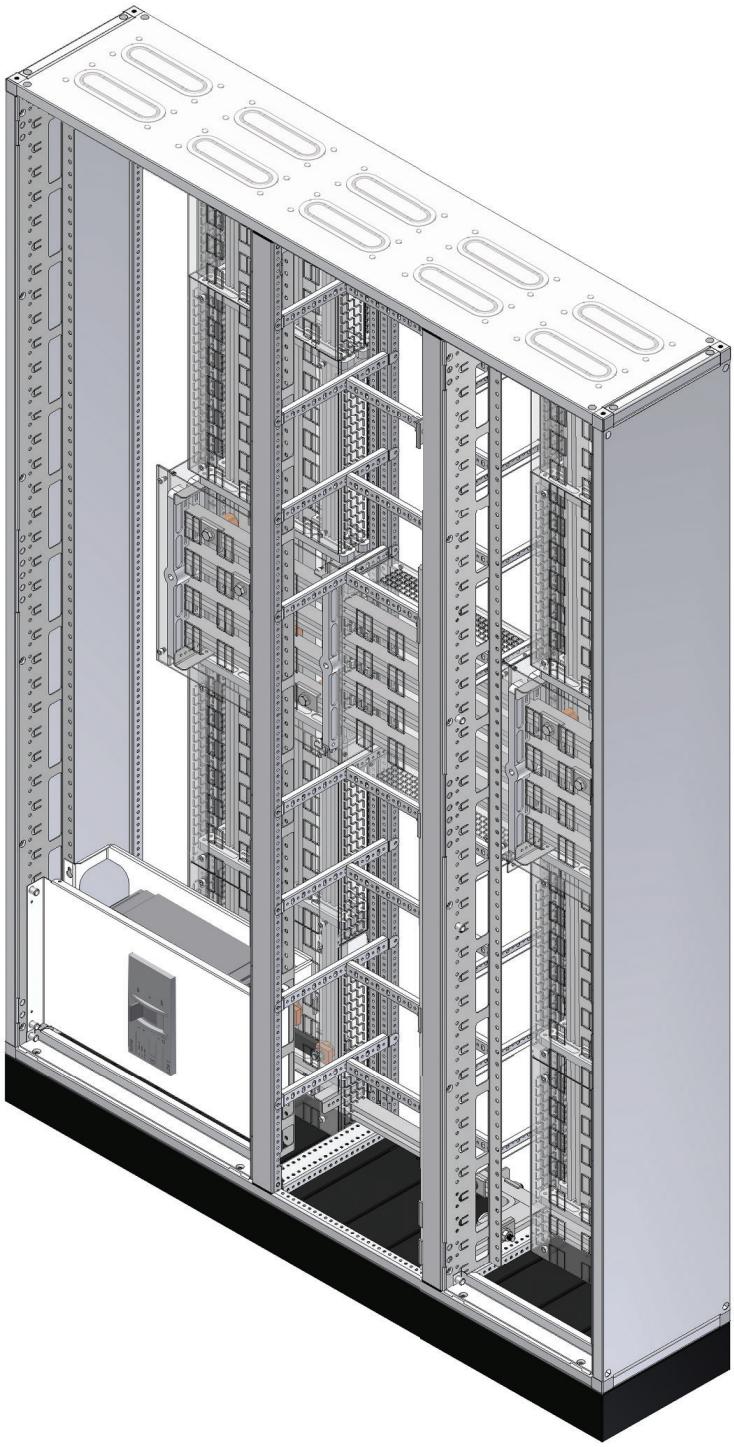

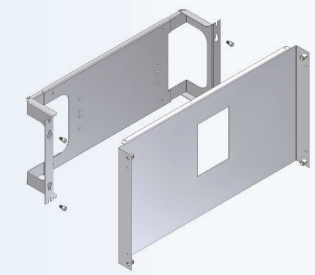

INSERT HORIZONTAL (SCHNEIDER ELECTRIC)

INDSATSE HORISONTAL (SCHNEIDER ELECTRIC)

TYPE	DESCRIPTION	SIZE (W×H)	No. OF BREAKERS	No. OF POLES	BREAKER TYPE	WEIGHT (kg)	ORDER No. RAL 9010 SMF	ORDER No. RAL 7035 FTF
HIS3-1 4.3	INSERT HORIZONTAL SE	400×300	1	3	NSX 100/160/250	2.98	66180	64750
HIS4-1 4.3	INSERT HORIZONTAL SE	400×300	1	4	NSX 100/160/250	2.98	66220	64780
HIS3-2 5.3	INSERT HORIZONTAL SE	500×300	1	3	NSX 100/160/250	3.6	66181	64751
HIS4-2 5.3	INSERT HORIZONTAL SE	500×300	1	4	NSX 100/160/250	3.6	66221	64781
HIS3-4 6.3	INSERT HORIZONTAL SE	600×300	1	3	NSX 100/160/250	4.21	66183	64753
HIS4-4 6.3	INSERT HORIZONTAL SE	600×300	1	4	NSX 100/160/250	4.21	66223	64783
HIS3-3 5.3	INSERT HORIZONTAL SE	500×300	1	3	NSX 400/630	3.64	66182	64752
HIS3-5 6.3	INSERT HORIZONTAL SE	600×300	1	3	NSX 400/630	4.25	66184	64754
HIS4-3 5.4-5	INSERT HORIZONTAL SE	500×450	1	4	NSX 400/630	5.58	66222	64782
HIS4-5 6.4-5	INSERT HORIZONTAL SE	600×450	1	4	NSX 400/630	6.53	66224	64784

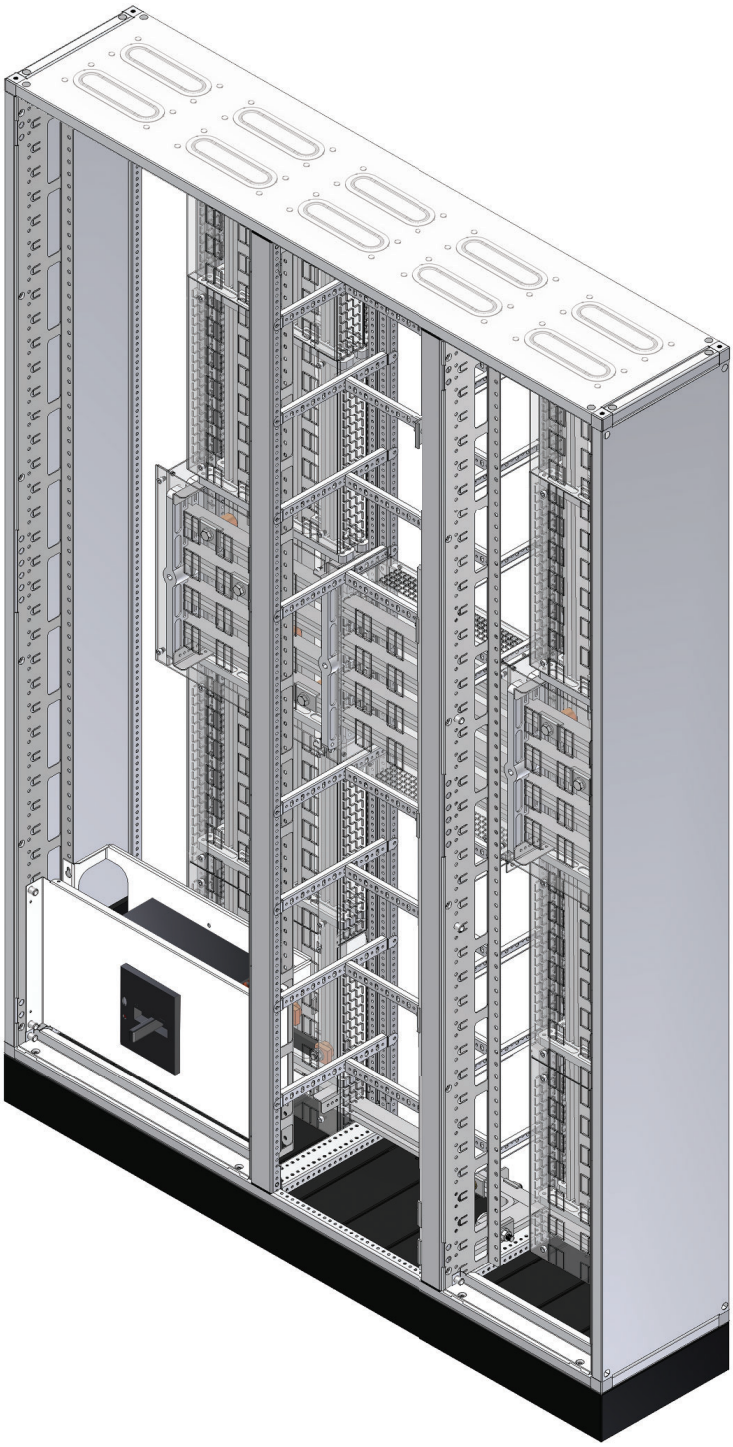

GENERAL DATA

Installation		Indoor
Mounting possibilities		Floor standing
Colour		RAL 7035 Fine Textured (Standard) Other colours by request
Coating	Type	Epoxy Polyester Powder
	Thickness	≥ 60μm

MECHANICAL DATA

Service access		Front only
		Front & Rear
Cable entry		Top
		Bottom
Compartments		Fixed
Degree of protection (IP code)		Up to IP43 Up to IP33 (in combination with IK08)
Mechanical impact (IK code)		IK08
Form of internal separation	as per IEC61439-2	Up to 4b
	as per BS EN 61439-2	Up to 4 Type 1-7
Mechanical operation	Techno Module Light	200 cycles
Recommended dimensions of transport section	Length	Up to 2400 mm (can be extended)
	Height	Up to 2400 mm (can be extended)
	Depth	Up to 2400 mm (can be extended)

ELECTRICAL DATA

Rated operational voltage (U_e)		Up to 1000 V
Rated insulation voltage (U_i)		Up to 1000 V
Rated impulse withstand voltage (U_{imp})		Up to 12 kV
Rated frequency (f)		Up to 60 Hz
Rated current (I_n)	Main busbar	Up to 1600 A @ 35°C
		Up to 1600 A @ 50°C
	Functional unit[1]	Up to 1450 A @ 35°C
		Up to 1170 A @ 50°C
Rated short-time withstand current (I_{cw})		Up to 50 kA - 1s
Rated conditional short circuit current (I_{cc})[2]		Up to 70 kA @ 415 V
		Up to 25 kA @ 690 V
		Up to 32 kA @ 800 V
Pollution degree		3
Earthing system		TN-S, TN-C, TN-C-S, TT, IT

[1] Ratings depend on circuit breaker model and manufacturer. Refer test certificates on www.elsteel.com
[2] Ratings @690V and @800V are applicable for functional unit compartments with Techno Module doors. Refer test certificates on www.elsteel.com

TYPE	DESCRIPTION	IK RATING	REMARKS
Enclosure IP43/IP33 (in combination with IK08)			
PFL	Plinth Frame Light	IK08	
PFLC	Plinth Frame Light with Corner Assembly		
SGPFL	Steel Gland Plate		
PGPFL	PC Gland Plate		
CRS	Corners		Version 2
CB	Corner Bar		Version 2
CBSL	Cross Bar Light		
DOL	Door Light		Version 3
DLSH	Door Light with Swing Handle		Version 3
DOB 3	Double Bit 3 Lock Insert		
SQ8	Square Lock Insert 8 mm		
KLSH	Key Lock Insert		
KLSHC	Key Lock Insert CL-001		
PLSH	Push Lock Insert		
DWNL	Door Light with Norwegian Lock		Version 3
KL	Knob Lock - Plastic		Version 3
COVL	Cover Light		Version 3
DSES	Door Seal System		Version 3
Enclosure IP3X			
CRL	Corners Light	IK08	
CBL	Corner Bar Light		

Plinth Frame Light	Mild steel 1.5 mm
Corners Light	Aluminium die casted
Corners Version 2	Aluminium die casted
Corner Bar / Cross Bar Light	Electro Galvanized steel 1 mm
Corner Bar Version 2	Electro Galvanized steel 2 mm
Door / Cover Light	Mild steel 1 mm
Mounting Plate	Mild steel 2 mm Alu-zinc 2 mm Hot dip Galvanized steel 3 mm
Fixed Type Mounting Plate	Alu-zinc 2 mm
Instant Plate Light	Mild steel 1 mm
Steel Blank Front Plate	Mild steel 1 mm
Danish Standard Meter Compartment	Mild steel 1 mm
Norwegian Standard Meter Compartment	Mild steel 1 mm
Adjustable Mounting Plate	Alu-zinc 1.5 mm
Chassis Profile	Alu-zinc 1.5 mm
Steel Din Rail Insert	Mild steel 1 mm
Escutcheon Door	Mild steel 1.5 mm
Busbar Holder	Self extinguishing fibre material / reinforced PC

COPPER SPECIFICATIONS
Electrolytic Copper high conductivity OC-ETP 99.98 % JIS H3140 C 1100 Tempered upto half hard.

1. Standard Paint

Degreasing and Phosphating

- By the spray method at approx. 47°C
- Cleaning and passivating of the surface
- Coating with phosphate (coat thickness approx. 1 µm)

Textured Powder Coating

- Electrostatic coating
- Raw material: Epoxy Polyester
- Can be readily overpainted
- Can be decontaminated
- High mechanical strength
- Good resistance to chemicals and UV rays coat thickness ≥70 µm

Smooth Powder Coating

- Electrostatic coating
- Raw material: Epoxy Polyester
- Can be readily overpainted
- Can be decontaminated
- High mechanical strength
- Good resistance to chemicals and UV rays coat thickness ≥60 µm

Corrosion resistance in accordance with IEC 62208 clause 9.13.1 and IEC 61439-2 clause 10.2.2.2 Severity test A

- 6 cycles of 24h each damp heat cycling test according to IEC 60068-2-30 (Test Db) at (40±2) °C and relative humidity of 95%
- 2 cycles of 24h each to salt mist test according to IEC 60068-2-11 (Test Ka: salt mist) at a temperature of (35±2) °C

Summary: No signs of rust, suitable for harsh industrial surrounding (Indoor installation)

2. Resistance

The standard coating is resistant to:

- Mineral oils
- Lubricants
- Machining emulsions
- Solvents (briefly, such as during cleaning processes)

The standard coating is suitable for a continuous temperature of -40°C to +90°C.
The standard coating can withstand a continuous temperature of 45°C to 85% RH.

Please Note
If UV resistant powder coating is required it has to be mentioned as a special requirement. The standard coating is not UV Resistant. IP protection categories do not imply that enclosures are suitable for outdoor applications.

3. Overpainting

After careful cleaning and perhaps slight roughening of the surface, the standard coating can be overpainted with Powder coating.

*Powder Coating System : Electrostatic Powder Coating System (ITW Gema – Switzerland)
*Pretreatment System : Five stage, Phosphate free Conversion Coating system (Henkel Germany)

Elsteel Techno Module Light System is cerified as per IEC by independent certification authorities.

Elsteel Techno Module Light System is fully type tested as per IEC 61439-1, IEC 61439-2 with the following brands.

Enclosure type	Breaker brand	Standard	Rated current of the assembly, I_{nA}	Date of issue	Certificate No.
Techno Module Light	ABB	IEC 61439-2 ed 3.0 2020-07	1600A	May 2022	DEKRA-2254507.100
Techno Module Light	General Electric	IEC 61439-1 ed 2.0 2011-08 IEC 61439-2 ed 2.0 2011-08	1000 A	December 2012	IPH-1819.2130777.0451

For more certifications and latest updates please see www.elsteel.com

MODULAR
ELSTEEL
ENCLOSURES

100% Danish
Technology

Møllevej 9 C · 2990 Nivå
Denmark
Tel +45 49 22 33 44
elsteel@elsteel.dk
www.elsteel.com

© 2004-2024 ELSTEEL. All Rights Reserved - VERSION 5